Copeland™ Scroll ZFKQ Compressor

for Refrigeration Applications



Product catalogue

COPELAND™

EMERSON™

Emerson developed the ZFKQ range of Copeland™ scroll compressors to provide the best performance in low temperatures. The series has a wide application envelope that can operate from -40°C to +7°C evaporating temperature. Its optimized design perfectly fits frozen food application requirements while its scroll compliance mechanism makes it highly tolerant of liquid slugging.

The range consists of:

- The ZF*KQE models that operate with liquid injection in order to control discharge temperature and extend the operating envelope.
- The ZFI*KQE models that are optimized for vapor injection with the use of a subcooler. This boosts the refrigeration system's cooling capacity and efficiency.

Features and benefits

High efficiency all year round

- The unique Copeland Compliant Scroll design patented by Emerson operates under continuous scroll flank contact, maintained by centrifugal force. This minimizes gas leakage while maximizing efficiency.
- With its capability for condensing operation down to 4°C on low temperature applications, Copeland Scroll technology provides the best seasonal efficiencies.
- Equipped with dynamic discharge valve that allows the discharge gas to reach desired pressure. This helps reduce efficiency loss by preventing gas re-compression.
- The vapor injection technology allows ZFI*KQE compressors to perform higher efficiency than single-stage compressors at low temperature operation condition. Thus makes ZFI*KQE the best in-class performance.

Compactness

- The small footprint of Copeland Scroll compressors enables compact system designs.
- Weight and dimensions for refrigeration equipment is reduced with increased capacity per compressor weight.

Robustness and reliability

- The Copeland Compliant Scroll design is tolerant to stresses caused by liquid slugging, flooded starts and debris commonly found in refrigeration systems.
- Easy to service and maintain due to their compact size and lightweight, simple design.
- Engineered for optimum performance with today's chlorine-free refrigerants.
- The Copeland Scroll compressor design has several inherent reliability advantages:
  - 70% fewer moving parts than reciprocating compressors
  - Axial & radial scroll compliance provides improved liquid handling capability
  - Hermetic design reduces leak potential
- Redesigned suction gas flow results in lower oil circulation and better motor cooling.
- EVI CoreSense Control kits provide advanced features to ensure optimum system operation.



Compressor protection

- ZF*KQE and ZFI*KQE compressors are supplied with internal thermal protectors that prevent motor overheating in case of loss of phase or low refrigerant charge.
- The ZF*KQE models that operate with liquid injection through DTC Valve in order to control the discharge temperature.
- The ZFI*KQE models that can operate with Emerson EVI CoreSense control kits in order to control vapor injection superheat as well as a safe discharge temperature.

Smooth operation

- All Copeland Scroll compressors are designed with a discharge check valve that isolates the high pressure discharge gas. This allows the compressor to start unloaded, resulting in low inrush currents.
- Smooth operations are made possible by the continuous compression process. This generates less vibration than reciprocating technology.

Delivers unmatched energy efficiency: 5%–20% improvement

- Motor, scroll and bearing redesign minimize annual energy consumption.
- Precision machined scrolls provide the highest isentropic efficiency and wear-in for improved performance over time.
- New valving technology adjusts the scroll compression ratio based on operating condition, significantly improving low ambient performance.
- Using vapor injection improves system capacity by 50% and efficiency by 20% on average at the low temperature rating condition.

One model for multiple refrigerants

- All ZF and ZFI compressors are qualified for R22, R404A, R507, R407A/C, R407F, R448A and R449A.

Notes: This catalogue only provides performance tables for R22 and R404A. Please visit Select Software Asia for more information.

Table of contents

Features and benefits	02
Nomenclature	05
Bill of material	05
Operating envelopes	06
Product line-up	08
Performance data	09
Technical data	26
EVI CoreSense	28
Dimensional drawings	34
Schematic diagram	51
Available models list	52
Accessory list	54
Sound Jacket	58
Contact list	62

Nomenclature

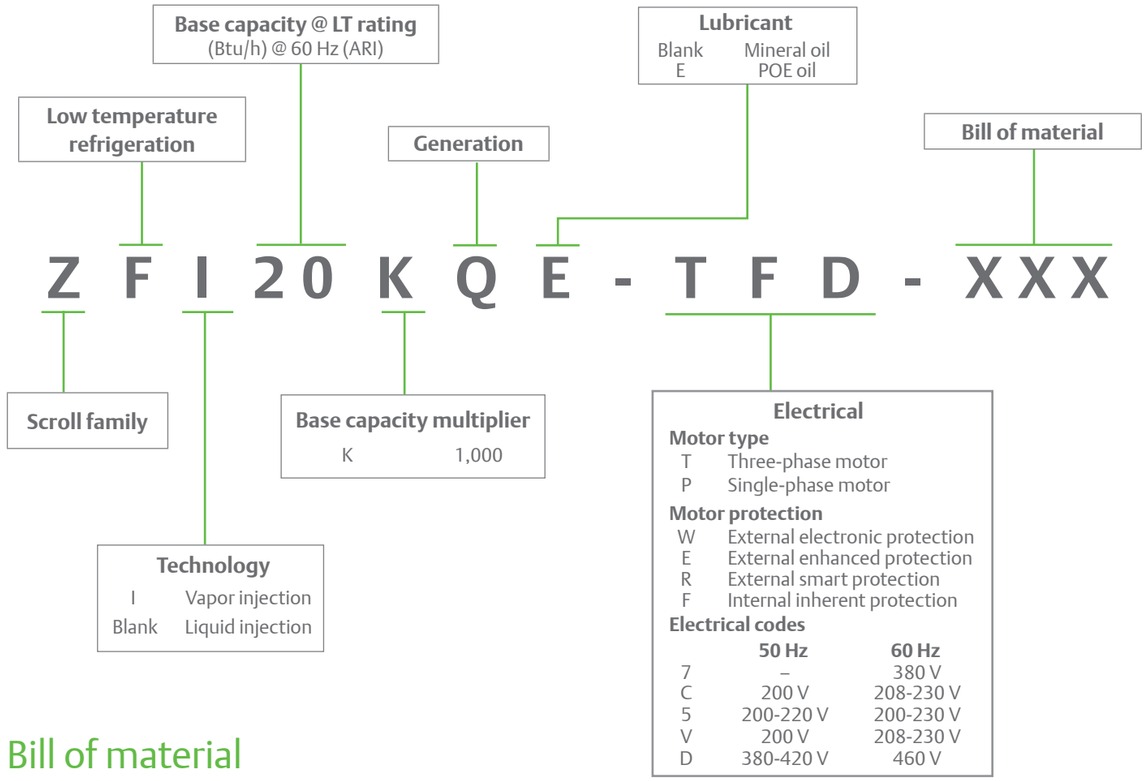

Bill of material

Compressor model	Motor code	BOM number	Stub tube connection	Rotalock connection	Oil sight glass	Schrader valve
Liquid injection						
ZF06-11KQE	TFD, TF5, PFV	550	✓		✓	✓
		551		✓	✓	✓
ZF13-28KQE	TFD,TF7,TFC[1]	550	✓		✓	✓
		551		✓	✓	✓
ZF28KQE	TFC	580	✓		✓	✓
		591		✓	✓	✓
ZF34-54KQE	TFD, TF7, TFC	554	✓		✓	✓
		564 / 567[2]		✓	✓	✓
Vapor injection						
ZFI20-39KQE	TFD, TF7, TFC[1]	550	✓		✓	✓
		552		✓	✓	✓
ZFI39KQE	TFC	580	✓		✓	✓
		592		✓	✓	✓
ZFI50-81KQE	TFD, TF7, TFC	554	✓		✓	✓
		564 / 567[2]		✓	✓	✓
ZFI96-140KQE	TED, TE7, TEC, TRD, TR7, TRC	522	✓		✓	✓
		523		✓	✓	✓

Remarks: See technical data sheet for the detailed connection size
ZF06-ZF54KQE only provide rotalock connection to liquid injection fitting for the installation of DTC valve
[1]Except ZF28KQE-TFC and ZFI39KQE-TFC
[2]BOM 554/564 (Sight glass fitting with restriction) only work with Emerson OMB oil management device, BOM567 (Standard sight glass fitting) works with Emerson OM3 in rack application.

Operating envelopes

R22

Vapor injection

ZFI20-26KQE

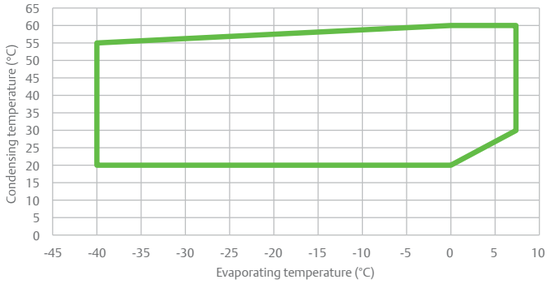

ZFI36-59KQE

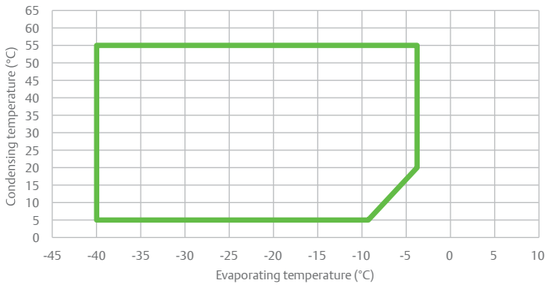

ZFI68-81KQE

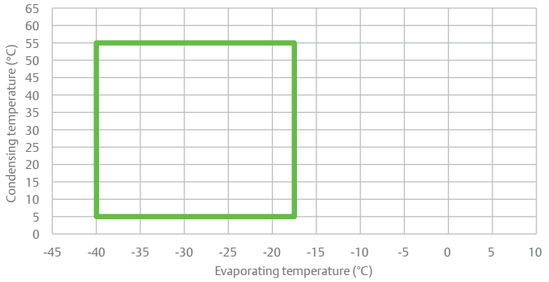

ZFI96-140KQE

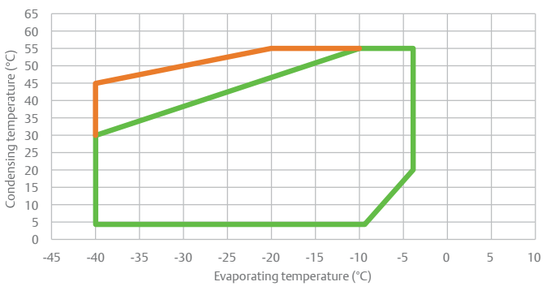

Note: 20°C Return gas + Vapor injection — 20K Superheat + Vapor injection

Liquid injection

ZF06 - 18KQE

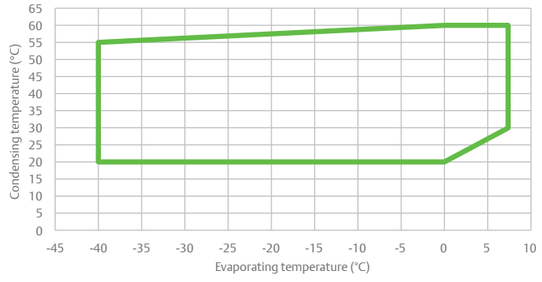

ZF25-41KQE

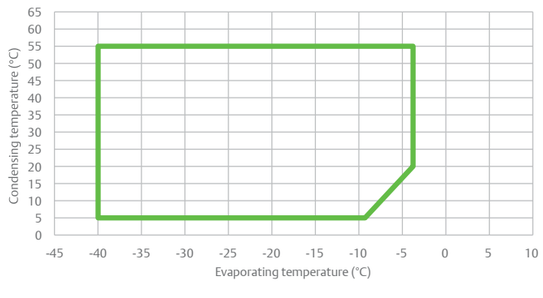

ZF49-54KQE

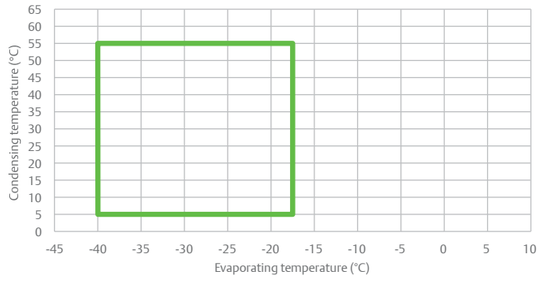

Note: 20°C return gas + liquid injection

Operating envelopes

R404A

Vapor injection

ZFI20 - 26KQE

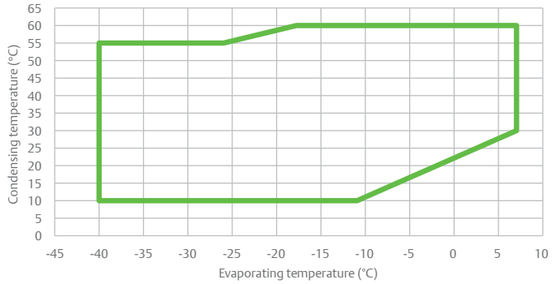

ZFI36 - 59KQE

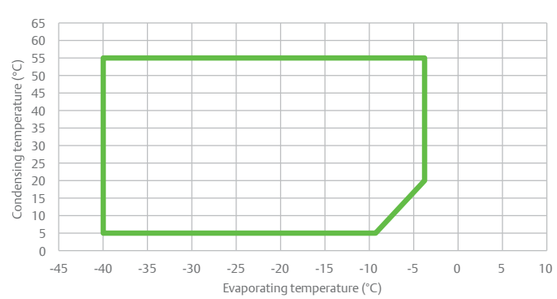

ZFI68-81KQE

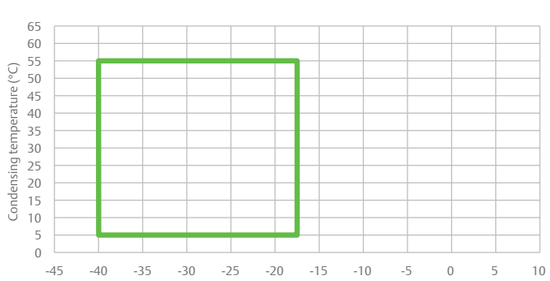

ZFI96-140KQE

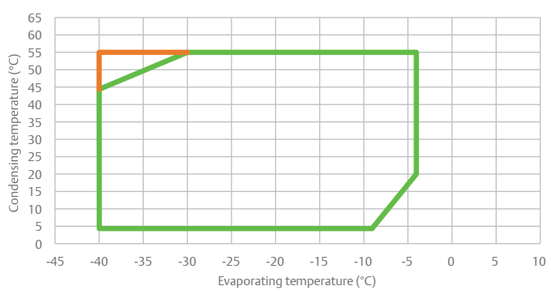

Note: 20°C Return gas + Vapor injection — 20K Superheat + Vapor injection

Liquid injection

ZF06 - 18KQE

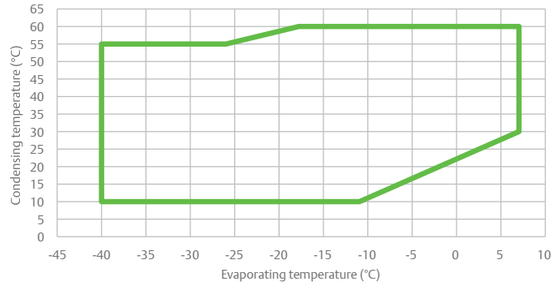

ZF25 - 41KQE

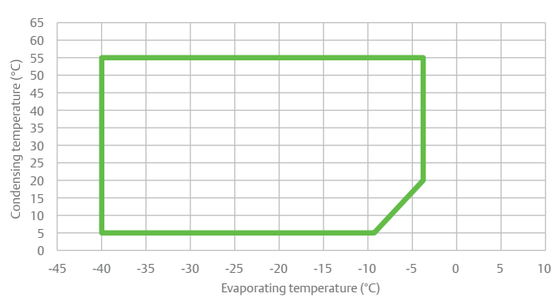

ZF49-54KQE

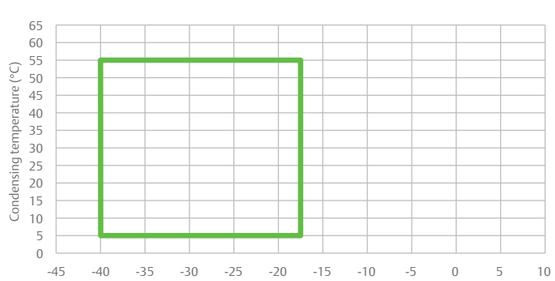

Note: 20°C return gas + liquid injection

Product line-up

R404A - 50 Hz

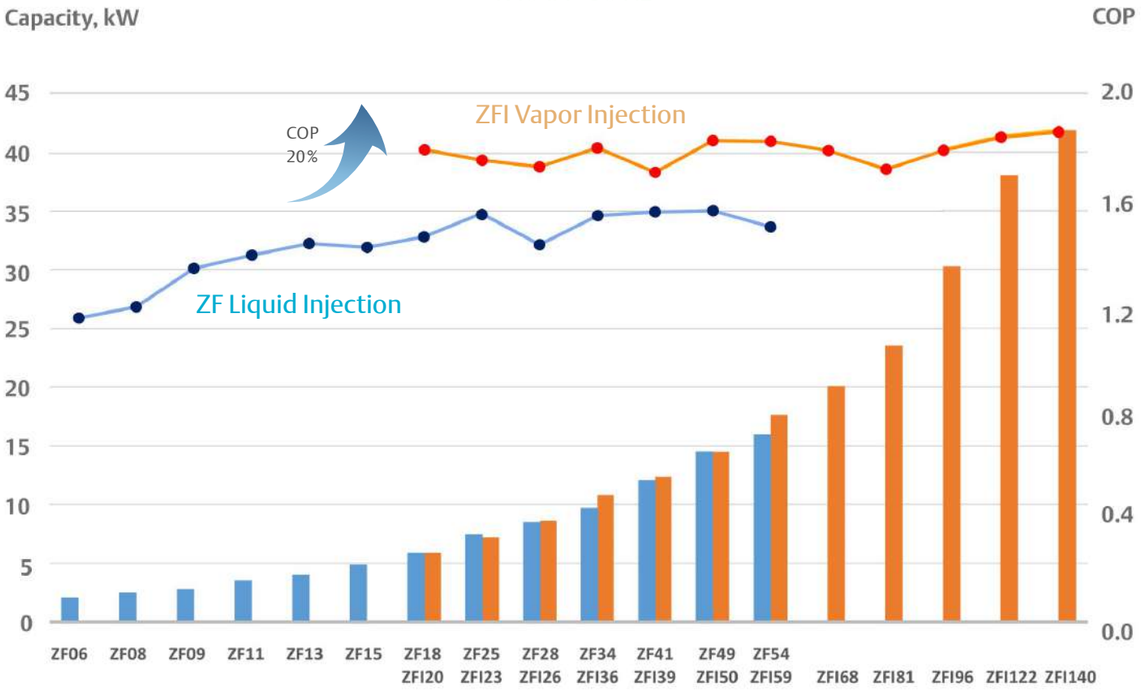

R404A - 60 Hz

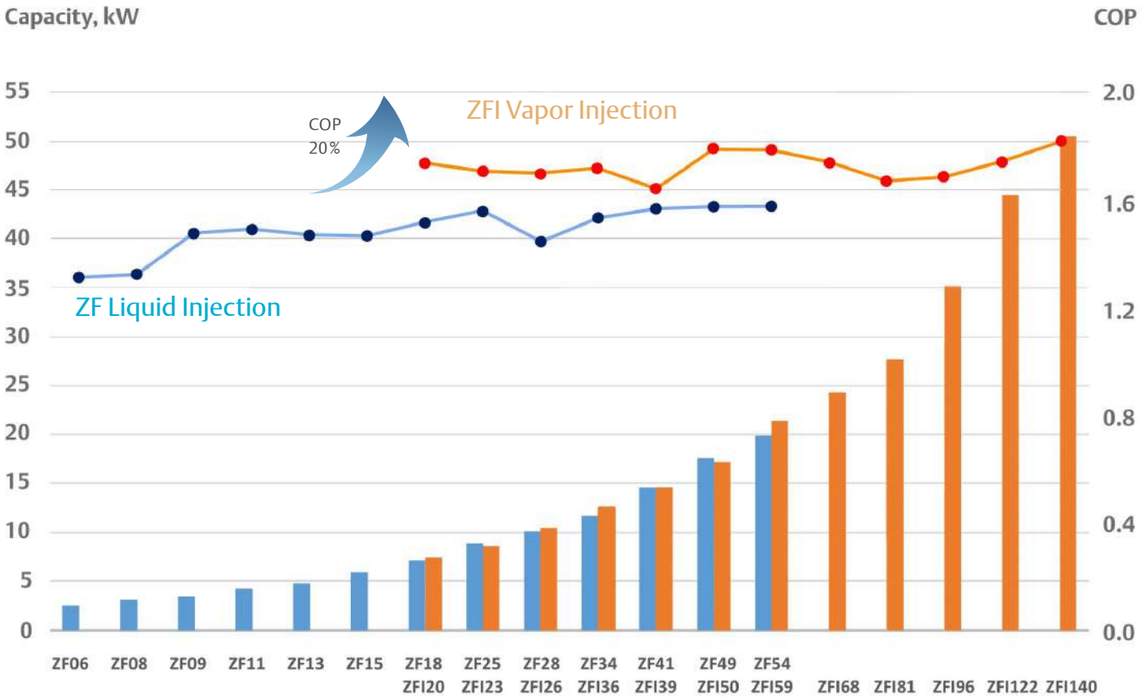

Notes: Based on low temperature cold room conditions: -25°C evaporating, 45°C condensing and 20°C return gas temperature.

Quick selection

R404A, 50Hz

Model	Nominal HP	Displacement (m³/h)	Condensing Temperature 45°C													
			Capacity (kW)							Power (kW)						
			Evaporating Temperature (°C)							Evaporating Temperature (°C)						
			-35	-30	-25	-20	-15	-10	-5	-35	-30	-25	-20	-15	-10	-5
Liquid Injection																
ZF06KQE	2	5.9	1.32	1.65	2.02	2.46	2.97	3.56	4.24	1.60	1.66	1.73	1.80	1.89	1.98	2.09
ZF08KQE	2.5	7.3	1.63	2.03	2.49	3.02	3.65	4.37	5.21	1.91	1.98	2.06	2.15	2.25	2.36	2.49
ZF09KQE	3	8.0	1.80	2.24	2.75	3.34	4.03	4.83	5.76	1.96	1.98	2.03	2.09	2.16	2.25	2.36
ZF11KQE	3.5	10.0	2.28	2.82	3.44	4.16	5.01	6.00	7.16	2.35	2.39	2.45	2.54	2.64	2.75	2.89
ZF13KQE	4	11.7	2.59	3.22	3.97	4.85	5.88	7.06	8.42	2.58	2.65	2.74	2.84	2.95	3.07	3.21
ZF15KQE	5	14.4	3.18	3.96	4.88	5.95	7.20	8.66	10.35	3.10	3.25	3.40	3.55	3.72	3.91	4.11
ZF18KQE	6	17.1	3.88	4.81	5.87	7.12	8.58	10.30	12.35	3.71	3.84	3.98	4.14	4.31	4.50	4.70
ZF25KQE	7.5	21.4	4.78	5.96	7.38	9.01	10.85	12.85	15.05	4.05	4.41	4.73	5.06	5.43	5.86	6.39
ZF28KQE	9	25.1	5.46	6.81	8.44	10.30	12.40	14.70	17.20	5.00	5.44	5.84	6.25	6.70	7.23	7.89
ZF34KQE	10	29.1	6.32	7.92	9.73	11.85	14.25	17.10	20.40	5.58	5.91	6.25	6.58	6.91	7.25	7.58
ZF41KQE	13	35.3	7.96	9.87	12.05	14.55	17.45	20.90	24.90	6.85	7.27	7.68	8.11	8.53	8.97	9.42
ZF49KQE	15	42.4	9.47	11.80	14.50	17.65	-	-	-	8.33	8.73	9.21	9.73	-	-	-
ZF54KQE	17	48.3	10.40	12.95	15.90	19.35	-	-	-	9.49	9.95	10.50	11.10	-	-	-
Vapor Injection																
ZFI20KQE	4	11.7	3.91	4.81	5.85	7.05	8.40	9.96	11.70	3.14	3.20	3.27	3.35	3.42	3.50	3.56
ZFI23KQE	5	14.4	5.31	6.12	7.20	8.53	10.10	11.90	13.90	3.72	3.92	4.10	4.27	4.43	4.57	4.71
ZFI26KQE	6	17.1	6.04	7.18	8.53	10.10	11.95	14.10	16.55	4.50	4.73	4.94	5.13	5.31	5.48	5.63
ZFI36KQE	8	21.4	7.53	9.03	10.75	12.70	14.80	17.15	19.70	5.20	5.61	5.98	6.29	6.56	6.80	7.00
ZFI39KQE	10	25.1	8.64	10.35	12.35	14.55	17.00	19.70	22.60	6.31	6.81	7.25	7.63	7.96	8.24	8.49
ZFI50KQE	12	29.1	9.99	12.05	14.50	17.30	20.40	23.60	27.10	7.11	7.53	7.94	8.32	8.70	9.10	9.52
ZFI59KQE	15	35.3	12.15	14.70	17.65	21.10	24.80	28.80	33.00	8.67	9.19	9.68	10.15	10.60	11.10	11.60
ZFI68KQE	18	42.4	13.80	16.65	20.10	23.90	-	-	-	10.10	10.70	11.25	11.80	-	-	-
ZFI81KQE	20	48.3	16.20	19.50	23.50	28.00	-	-	-	12.25	13.00	13.70	14.35	-	-	-
ZFI96KQE	25	60.7	20.60	25.10	30.20	36.00	42.80	50.70	59.80	15.55	16.25	16.90	17.60	18.30	19.00	19.85
ZFI122KQE	30	77.3	26.00	31.60	38.00	45.40	53.90	63.80	75.40	18.95	19.80	20.60	21.40	22.30	23.20	24.20
ZFI140KQE	40	87.5	28.50	34.70	41.80	50.00	59.60	70.60	83.50	20.70	21.70	22.50	23.40	24.30	25.30	26.40

R404A, 60Hz

Model	Nominal HP	Displacement (m³/h)	Condensing Temperature 45°C													
			Capacity (kW)							Power (kW)						
			Evaporating Temperature (°C)							Evaporating Temperature (°C)						
			-35	-30	-25	-20	-15	-10	-5	-35	-30	-25	-20	-15	-10	-5
Liquid Injection																
ZF06KQE	2	7.1	1.56	1.94	2.38	2.88	3.46	4.13	4.92	1.73	1.76	1.82	1.91	2.02	2.15	2.27
ZF08KQE	2.5	8.8	1.97	2.45	3.01	3.66	4.41	5.29	6.30	2.16	2.21	2.28	2.38	2.49	2.62	2.77
ZF09KQE	3	9.7	2.20	2.73	3.34	4.04	4.87	5.83	6.96	2.15	2.20	2.27	2.36	2.48	2.61	2.76
ZF11KQE	3.5	12.1	2.74	3.39	4.16	5.05	6.10	7.30	8.70	2.60	2.69	2.80	2.93	3.09	3.27	3.47
ZF13KQE	4	14.1	3.07	3.83	4.74	5.80	7.03	8.44	10.05	3.05	3.13	3.23	3.36	3.52	3.70	3.92
ZF15KQE	5	17.4	3.86	4.79	5.87	7.14	8.62	10.35	12.35	3.65	3.83	4.01	4.21	4.43	4.67	4.95
ZF18KQE	6	20.6	4.72	5.83	7.10	8.60	10.35	12.40	14.80	4.32	4.48	4.69	4.95	5.24	5.56	5.90
ZF25KQE	7.5	25.8	5.80	7.18	8.85	10.80	13.15	15.85	18.90	4.77	5.24	5.68	6.09	6.49	6.89	7.28
ZF28KQE	9	30.3	6.62	8.20	10.10	12.35	15.00	18.10	21.60	5.88	6.46	7.00	7.52	8.01	8.50	8.98
ZF34KQE	10	35.1	7.57	9.48	11.65	14.15	17.05	20.50	24.40	6.79	7.20	7.61	8.01	8.42	8.82	9.23
ZF41KQE	13	42.6	9.59	11.90	14.50	17.55	21.00	25.20	30.00	8.25	8.75	9.26	9.77	10.30	10.80	11.35
ZF49KQE	15	51.2	11.40	14.20	17.45	21.20	-	-	-	10.05	10.50	11.10	11.70	-	-	-
ZF54KQE	17	58.3	13.00	16.20	19.90	24.20	-	-	-	11.45	12.00	12.65	13.35	-	-	-
Vapor Injection																
ZFI20KQE	4	14.1	5.07	6.13	7.34	8.72	10.30	12.10	14.15	3.78	3.95	4.12	4.27	4.41	4.54	4.66
ZFI23KQE	5	17.4	6.32	7.28	8.57	10.15	12.00	14.15	16.55	4.39	4.63	4.84	5.04	5.22	5.40	5.55
ZFI26KQE	6	20.6	7.25	8.77	10.45	12.35	14.50	16.90	19.70	5.31	5.66	6.00	6.32	6.63	6.93	7.23
ZFI36KQE	8	25.8	9.02	10.70	12.65	15.00	17.85	21.20	25.20	6.26	6.74	7.19	7.63	8.09	8.59	9.17
ZFI39KQE	10	30.3	10.40	12.30	14.55	17.25	20.50	24.40	28.90	7.50	8.08	8.62	9.15	9.70	10.30	11.00
ZFI50KQE	12	35.1	11.85	14.25	17.15	20.50	24.10	28.00	32.00	8.40	8.90	9.37	9.83	10.30	10.75	11.25
ZFI59KQE	15	42.6	14.65	17.70	21.30	25.40	29.90	34.70	39.70	10.45	11.10	11.65	12.25	12.80	13.35	14.00
ZFI68KQE	18	51.2	16.55	20.00	24.10	28.70	-	-	-	12.10	12.85	13.50	14.15	-	-	-
ZFI81KQE	20	58.3	19.05	23.00	27.60	33.00	-	-	-	14.45	15.30	16.10	16.90	-	-	-
ZFI96KQE	25	73.3	24.00	29.30	35.20	42.00	49.90	59.10	69.80	18.75	19.60	20.40	21.20	22.10	23.00	24.00
ZFI122KQE	30	93.3	30.30	36.90	44.40	53.00	62.90	74.50	88.00	22.90	23.90	24.90	25.90	26.90	28.00	29.20
ZFI140KQE	40	105.5	34.40	41.80	50.40	60.20	71.70	85.10	100.50	24.90	26.00	27.10	28.10	29.20	30.30	31.60

Condition: 20°C return gas, 0K subcooling

Performance data

TFC: 200 V, 3-Phase, 50 Hz ; **TFD**: 380-420 V, 3-Phase, 50 Hz

Liquid injection

R22

Model			Cond. temp. °C	Evap. temp. °C										
				-40	-35	-30	-25	-20	-15	-10	-5	0	5	7
ZF06KQE	TF5 TFD	Q	30	1.15	1.46	1.82	2.24	2.73	3.31	3.98	4.74	5.62	6.61	7.05
			40	1.05	1.34	1.67	2.06	2.52	3.05	3.66	4.37	5.18	6.10	6.50
			50	0.97	1.23	1.53	1.88	2.29	2.77	3.32	3.96	4.70	5.55	5.91
		P	30	1.21	1.24	1.29	1.34	1.40	1.47	1.55	1.65	1.76	1.89	1.95
			40	1.43	1.47	1.52	1.58	1.64	1.70	1.78	1.87	1.98	2.10	2.15
			50	1.69	1.74	1.79	1.85	1.92	1.99	2.06	2.15	2.25	2.36	2.41
ZF08KQE	TF5 TFD	Q	30	1.41	1.79	2.23	2.75	3.36	4.07	4.89	5.83	6.91	8.13	8.66
			40	1.29	1.65	2.06	2.54	3.10	3.75	4.50	5.37	6.36	7.50	7.99
			50	1.19	1.52	1.89	2.32	2.82	3.40	4.09	4.87	5.78	6.82	7.27
		P	30	1.44	1.48	1.54	1.60	1.67	1.75	1.85	1.96	2.10	2.25	2.32
			40	1.70	1.76	1.81	1.88	1.95	2.03	2.12	2.23	2.35	2.50	2.56
			50	2.01	2.07	2.14	2.21	2.28	2.36	2.46	2.56	2.68	2.81	2.87
ZF09KQE	TF5 TFD	Q	30	1.59	2.01	2.50	3.09	3.78	4.58	5.51	6.58	7.79	9.17	9.77
			40	1.46	1.85	2.30	2.84	3.48	4.22	5.07	6.06	7.18	8.46	9.01
			50	1.34	1.69	2.11	2.59	3.16	3.83	4.60	5.50	6.52	7.69	8.20
		P	30	1.52	1.57	1.61	1.67	1.72	1.79	1.86	1.94	2.04	2.15	2.19
			40	1.80	1.85	1.90	1.95	2.01	2.07	2.14	2.22	2.31	2.41	2.45
			50	2.10	2.16	2.22	2.28	2.34	2.41	2.48	2.56	2.65	2.75	2.79
ZF11KQE	TF5 TFD	Q	30	1.97	2.49	3.10	3.82	4.67	5.65	6.78	8.07	9.54	11.20	11.91
			40	1.81	2.29	2.86	3.52	4.30	5.21	6.26	7.47	8.84	10.39	11.06
			50	1.65	2.08	2.59	3.19	3.89	4.72	5.67	6.78	8.04	9.47	10.09
		P	30	1.69	1.74	1.81	1.88	1.97	2.08	2.20	2.34	2.50	2.67	2.74
			40	2.00	2.06	2.13	2.21	2.30	2.40	2.52	2.65	2.80	2.97	3.04
			50	2.37	2.44	2.51	2.59	2.69	2.79	2.91	3.04	3.19	3.35	3.42
ZF13KQE	TFC TFD	Q	30	2.30	2.89	3.60	4.44	5.44	6.60	7.94	9.48	11.23	13.21	14.07
			40	2.12	2.66	3.32	4.09	5.01	6.07	7.31	8.73	10.34	12.17	12.97
			50	1.93	2.43	3.02	3.72	4.55	5.51	6.63	7.93	9.41	11.08	11.82
		P	30	2.02	2.08	2.15	2.23	2.31	2.41	2.51	2.62	2.74	2.87	2.93
			40	2.38	2.45	2.52	2.61	2.70	2.81	2.92	3.04	3.17	3.31	3.37
			50	2.79	2.86	2.94	3.04	3.14	3.26	3.38	3.51	3.65	3.80	3.87
ZF15KQE	TFC TFD	Q	30	2.79	3.52	4.39	5.42	6.63	8.03	9.63	11.47	13.54	15.87	16.87
			40	2.57	3.25	4.05	5.01	6.12	7.42	8.91	10.62	12.55	14.73	15.68
			50	2.34	2.95	3.68	4.54	5.56	6.74	8.11	9.68	11.46	13.48	14.35
		P	30	2.47	2.53	2.61	2.70	2.82	2.95	3.11	3.29	3.52	3.78	3.89
			40	2.89	2.97	3.06	3.15	3.27	3.40	3.55	3.74	3.95	4.19	4.30
			50	3.38	3.47	3.58	3.68	3.81	3.94	4.10	4.28	4.49	4.73	4.83
ZF18KQE	TFC TFD	Q	30	3.25	4.12	5.17	6.42	7.89	9.60	11.58	13.84	16.41	19.31	20.57
			40	2.98	3.78	4.75	5.90	7.25	8.82	10.64	12.73	15.11	17.80	18.97
			50	2.69	3.42	4.30	5.34	6.56	7.99	9.65	11.55	13.73	16.20	17.27
		P	30	3.13	3.18	3.25	3.33	3.43	3.55	3.69	3.86	4.05	4.27	4.36
			40	3.68	3.75	3.82	3.91	4.02	4.14	4.29	4.46	4.65	4.86	4.96
			50	4.31	4.39	4.49	4.60	4.72	4.86	5.02	5.20	5.40	5.62	5.72

Notes:
1. Q for capacity; P for power. Units in kW
2. All ZF*KQE values are rated at return gas temperature: 20°C and subcooling: 0 K

Performance data

TFC: 200 V, 3-Phase, 50 Hz ; **TFD**: 380-420 V, 3-Phase, 50 Hz

Liquid injection

R22

Model			Cond. temp. °C	Evap. temp. °C										
				-40	-35	-30	-25	-20	-15	-10	-5	0	5	7
ZF25KQE	TFC TFD	Q	30	4.08	5.17	6.48	8.04	9.89	12.04	14.52	17.35			
			40	3.73	4.74	5.95	7.39	9.09	11.06	13.34	15.96			
			50	3.37	4.29	5.39	6.69	8.22	10.02	12.09	14.48			
		P	30	3.93	3.99	4.07	4.17	4.30	4.45	4.63	4.84			
			40	4.62	4.70	4.79	4.90	5.04	5.19	5.38	5.59			
			50	5.40	5.50	5.62	5.76	5.92	6.09	6.29	6.52			
ZF28KQE	TFC TFD	Q	30	4.79	6.07	7.61	9.45	11.62	14.14	17.06	20.39			
			40	4.39	5.57	7.00	8.69	10.68	13.00	15.68	18.76			
			50	3.96	5.04	6.33	7.86	9.66	11.77	14.21	17.02			
		P	30	4.72	4.79	4.88	5.01	5.16	5.34	5.55	5.80			
			40	5.54	5.63	5.75	5.88	6.04	6.23	6.45	6.70			
			50	6.48	6.61	6.75	6.91	7.10	7.31	7.55	7.82			
ZF34KQE	TFC TFD	Q	30	5.31	6.77	8.52	10.59	13.01	15.82	19.06	22.74			
			40	4.81	6.19	7.83	9.75	12.00	14.59	17.58	20.99			
			50	4.22	5.51	7.03	8.79	10.84	13.22	15.95	19.06			
		P	30	4.32	4.50	4.68	4.87	5.06	5.26	5.46	5.66			
			40	4.95	5.21	5.46	5.71	5.95	6.19	6.42	6.64			
			50	5.67	6.02	6.36	6.68	6.98	7.27	7.53	7.77			
ZF41KQE	TFC TFD	Q	30	6.35	8.03	10.03	12.41	15.21	18.48	22.26	26.61			
			40	5.80	7.40	9.27	11.46	14.03	17.01	20.46	24.42			
			50	5.09	6.61	8.36	10.38	12.72	15.43	18.56	22.15			
		P	30	5.24	5.49	5.75	6.01	6.27	6.53	6.80	7.06			
			40	6.05	6.38	6.71	7.03	7.35	7.66	7.97	8.27			
			50	6.95	7.36	7.76	8.16	8.53	8.90	9.26	9.61			
ZF49KQE	TFC TFD	Q	30	7.81	9.82	12.30	15.28	18.78						
			40	7.10	8.99	11.31	14.08	17.33						
			50	6.23	8.00	10.16	12.72	15.71						
		P	30	6.48	6.68	6.94	7.25	7.59						
			40	7.52	7.76	8.08	8.45	8.86						
			50	8.78	9.07	9.43	9.86	10.32						
ZF54KQE	TFC TFD	Q	30	8.99	11.36	14.18	17.49	21.36						
			40	8.31	10.54	13.16	16.23	19.82						
			50	7.50	9.56	11.96	14.78	18.06						
		P	30	4.26	4.73	5.16	5.62	6.14						
			40	5.54	6.02	6.48	6.95	7.47						
			50	7.25	7.80	8.31	8.83	9.40						

Notes:
1. Q for capacity; P for power. Units in kW
2. All ZF*KQE values are rated at return gas temperature: 20°C and subcooling: 0 K

Performance data

TFC: 200 V, 3-Phase, 50 Hz ; **TFD**: 380-420 V, 3-Phase, 50 Hz

Vapor injection

R22

Model			Cond. temp. °C	Evap. temp. °C										
				-40	-35	-30	-25	-20	-15	-10	-5	0	5	7
ZFI20KQE	TFC TFD	Q	30	2.56	3.22	4.01	4.94	6.00	7.18	8.47	9.87	11.37	12.97	13.64
			40	2.55	3.21	3.99	4.90	5.93	7.06	8.30	9.63	11.06	12.56	13.18
			50	2.32	2.99	3.78	4.68	5.68	6.78	7.97	9.24	10.59	12.01	12.60
		P	30	2.14	2.18	2.27	2.39	2.55	2.72	2.91	3.09	3.28	3.45	3.51
			40	2.39	2.50	2.63	2.76	2.90	3.02	3.13	3.22	3.26	3.27	3.26
			50	2.98	3.13	3.27	3.39	3.48	3.53	3.53	3.48	3.37	3.18	3.09
		LO	30	-7.70	-6.20	-4.40	-1.80	1.30	4.90	8.80	12.80	16.70	20.60	22.00
			40	-4.90	-3.60	-1.70	0.90	4.30	8.10	12.20	16.30	20.40	24.40	25.90
			50	3.60	2.60	3.10	5.00	7.90	11.60	15.60	19.80	23.90	28.00	29.50
ZFI23KQE	TFC TFD	Q	30	3.46	4.39	5.48	6.74	8.19	9.84	11.75	13.85	16.25	18.90	20.10
			40	3.36	4.28	5.34	6.55	7.93	9.50	11.30	13.30	15.55	18.10	19.15
			50	3.19	4.10	5.12	6.28	7.60	9.09	10.80	12.70	14.80	17.20	18.20
		P	30	2.48	2.56	2.65	2.75	2.87	3.01	3.18	3.39	3.63	3.92	4.05
			40	2.97	3.10	3.21	3.34	3.46	3.60	3.76	3.95	4.17	4.42	4.53
			50	3.58	3.75	3.91	4.06	4.21	4.36	4.52	4.70	4.90	5.13	5.23
		LO	30	-13.10	-14.70	-16.20	-16.20	-14.40	-11.00	-6.40	-1.30	3.90	9.00	11.00
			40	-17.30	-14.70	-13.90	-12.90	-10.70	-7.40	-3.20	1.60	6.50	11.40	13.20
			50	-12.30	-6.10	-3.90	-2.50	-0.70	1.80	5.10	8.90	13.00	17.00	18.60
ZFI26KQE	TFC TFD	Q	30	3.85	4.79	5.97	7.36	8.94	10.66	12.51	14.45	16.45	18.49	19.30
			40	3.79	4.73	5.89	7.25	8.78	10.45	12.22	14.07	15.96	17.87	18.63
			50	3.44	4.38	5.55	6.89	8.38	9.99	11.70	13.47	15.26	17.06	17.77
		P	30	2.98	3.08	3.21	3.36	3.57	3.84	4.19	4.65	5.21	5.91	6.23
			40	3.37	3.57	3.75	3.92	4.10	4.31	4.56	4.86	5.24	5.70	5.91
			50	4.23	4.49	4.69	4.84	4.95	5.05	5.15	5.26	5.41	5.60	5.69
		LO	30	-5.40	-3.40	-1.70	0.50	3.50	7.20	11.50	16.20	21.10	26.10	28.10
			40	-2.20	-0.40	1.20	3.50	6.60	10.50	15.00	19.80	24.80	29.90	32.00
			50	6.20	5.90	6.20	7.70	10.40	14.10	18.50	23.30	28.40	33.60	35.60
ZFI36KQE	TFC TFD	Q	30	5.37	6.66	8.04	9.62	11.52	13.85	16.72	20.25			
			40	5.00	6.28	7.63	9.17	11.02	13.29	16.09	19.54			
			50	4.41	5.65	6.96	8.44	10.22	12.42	15.13	18.49			
		P	30	3.08	3.38	3.73	4.11	4.51	4.90	5.29	5.64			
			40	4.00	4.27	4.57	4.90	5.24	5.57	5.88	6.16			
			50	5.64	5.82	6.03	6.27	6.51	6.73	6.93	7.09			
		LO	30	-12.40	-11.80	-7.70	-3.60	-0.90	-0.30	-1.70	-5.00			
			40	-2.20	-3.10	0.10	3.60	5.80	6.10	4.40	0.90			
			50	5.20	3.80	6.80	10.30	12.40	12.60	10.80	7.20			
ZFI39KQE	TFC TFD	Q	30	6.15	7.66	9.25	11.06	13.23	15.92	19.27	23.43			
			40	5.74	7.22	8.77	10.54	12.66	15.28	18.55	22.62			
			50	5.07	6.51	8.00	9.70	11.74	14.28	17.46	21.42			
		P	30	3.50	3.78	4.16	4.60	5.06	5.47	5.80	6.01			
			40	4.50	4.75	5.10	5.49	5.87	6.22	6.46	6.57			
			50	6.32	6.49	6.74	7.02	7.30	7.51	7.62	7.58			
		LO	30	-19.40	-14.90	-10.50	-6.90	-4.30	-3.00	-2.90	-3.80			
			40	-6.70	-5.20	-2.40	0.40	2.50	3.50	3.40	2.30			
			50	2.00	2.10	4.50	7.20	9.20	10.20	10.10	9.00			

Notes:
1. Q for capacity, P for power. Units in kW; LO for liquid out temperature in °C
2. All ZF*KQE values are rated at return gas temperature: 20°C and max subcooling
3. 20K Superheat

Performance data

TFC: 200 V, 3-Phase, 50 Hz ; **TFD**: 380-420 V, 3-Phase, 50 Hz

Vapor injection

R22

Model			Cond. temp. °C	Evap. temp. °C										
				-40	-35	-30	-25	-20	-15	-10	-5	0	5	7
ZFI59KQE	TFC TFD	Q	30	8.79	10.88	13.11	15.67	18.75	22.54	27.23	32.99			
			40	8.19	10.25	12.43	14.93	17.94	21.63	26.19	31.81			
			50	7.19	9.20	11.32	13.74	16.64	20.21	24.63	30.10			
		P	30	5.07	5.37	5.91	6.57	7.23	7.76	8.05	7.97			
			40	6.45	6.73	7.23	7.83	8.40	8.83	8.98	8.74			
			50	9.02	9.20	9.58	10.03	10.43	10.66	10.60	10.12			
		LO	30	-11.60	-9.20	-5.00	-1.20	1.30	2.20	1.40	-0.70			
			40	-0.50	-0.20	2.70	5.80	7.80	8.40	7.50	5.10			
			50	7.30	6.60	9.30	12.30	14.30	14.90	13.90	11.50			
ZFI68KQE	TFC TFD	Q	30	10.54	12.93	15.57	18.63	22.31						
			40	9.77	12.15	14.76	17.76	21.34						
			50	8.55	10.90	13.44	16.35	19.81						
		P	30	5.92	6.38	7.04	7.79	8.56						
			40	7.61	8.03	8.62	9.29	9.95						
			50	10.69	10.97	11.40	11.89	12.35						
		LO	30	-9.50	-8.30	-4.20	-0.20	2.30						
			40	0.70	0.30	3.30	6.70	8.80						
			50	8.20	7.10	10.00	13.20	15.20						
ZFI96KQE	TEC TED	Q	30	15.70	18.80	22.70	27.50	33.50	40.70	49.30	59.40			
			40	15.40	18.70	22.50	26.50	31.70	38.00	45.30	53.80			
			50			21.10	25.30	30.00	35.40	41.40	48.50			
		P	30	9.74	10.20	10.70	11.25	11.85	12.60	13.40	14.35			
			40	12.30	12.85	13.40	13.80	14.40	15.05	15.75	16.55			
			50			16.60	17.20	17.75	18.35	18.90	19.60			
		LO	30	-20.50	-9.30	-1.90	2.60	4.80	5.50	5.10	3.70			
			40	-6.70	-3.50	1.70	7.00	11.60	15.10	17.50	18.80			
			50			9.50	13.40	18.80	24.10	28.60	32.10			
ZFI122KQE	TEC TED	Q	30	19.81	23.68	28.57	34.68	42.18	51.26	62.10	74.88			
			40	19.42	23.58	28.34	33.36	40.00	47.83	57.05	67.82			
			50			26.57	31.90	37.83	44.57	52.15	61.16			
		P	30	11.73	12.30	12.90	13.56	14.30	15.14	16.12	17.26			
			40	14.80	15.48	16.12	16.60	17.33	18.11	18.97	19.94			
			50			20.01	20.72	21.40	21.99	22.76	23.58			
		LO	30	-20.50	-9.30	-1.90	2.60	4.90	5.50	5.10	3.70			
			40	-6.70	-3.50	1.70	7.00	11.60	15.10	17.50	18.90			
			50			9.50	13.50	18.80	24.10	28.60	32.10			
ZFI140KQE	TEC TED	Q	30	22.80	27.30	32.90	40.00	48.60	59.00	71.50	86.20			
			40	22.40	27.20	32.60	38.40	46.00	55.00	65.60	78.00			
			50			30.50	36.70	43.50	50.90	59.90	70.30			
		P	30	12.80	13.40	14.05	14.75	15.60	16.50	17.55	18.80			
			40	16.15	16.90	17.60	18.10	18.90	19.75	20.70	21.70			
			50			21.80	22.60	23.30	24.00	24.80	25.70			
		LO	30	-22.70	-11.60	-4.10	0.50	3.00	3.80	3.30	2.00			
			40	-8.60	-5.50	-0.20	5.40	10.10	13.70	16.10	17.40			
			50			8.00	12.10	17.60	23.00	27.50	30.90			

Notes:
1. Q for capacity, P for power. Units in kW; LO for liquid out temperature in °C
2. All ZF*KQE values are rated at return gas temperature: 20°C and max subcooling
3. 20K Superheat

Performance data

TF7: 380 V, 3-Phase, 60 Hz ; **TFC**: 208-230 V, 3-Phase, 60 Hz ; **TFD**: 460 V, 3-Phase, 60 Hz

Liquid injection

R22

Model			Cond. temp. °C	Evap. temp. °C										
				-40	-35	-30	-25	-20	-15	-10	-5	0	5	7
ZF06KQE	TF5 TFD	Q	30	1.32	1.66	2.08	2.59	3.18	3.87	4.66	5.54	6.54	7.64	8.11
			40	1.23	1.55	1.94	2.42	2.97	3.61	4.35	5.17	6.10	7.13	7.57
			50	1.15	1.44	1.80	2.23	2.73	3.32	3.99	4.75	5.59	6.54	6.94
		P	30	1.31	1.35	1.39	1.44	1.49	1.56	1.65	1.75	1.88	2.05	2.12
			40	1.57	1.60	1.64	1.67	1.71	1.77	1.85	1.95	2.07	2.23	2.30
			50	1.90	1.92	1.94	1.96	2.00	2.05	2.12	2.21	2.33	2.48	2.55
ZF08KQE	TF5 TFD	Q	30	1.68	2.11	2.64	3.29	4.04	4.92	5.92	7.05	8.31	9.71	10.31
			40	1.57	1.97	2.47	3.07	3.78	4.60	5.53	6.58	7.76	9.06	9.62
			50	1.46	1.83	2.29	2.83	3.47	4.22	5.07	6.03	7.11	8.31	8.83
		P	30	1.63	1.68	1.73	1.79	1.86	1.94	2.05	2.18	2.34	2.55	2.64
			40	1.96	2.00	2.03	2.08	2.13	2.20	2.30	2.42	2.58	2.77	2.86
			50	2.36	2.39	2.41	2.44	2.49	2.55	2.63	2.75	2.89	3.08	3.17
ZF09KQE	TF5 TFD	Q	30	1.92	2.43	3.03	3.74	4.56	5.52	6.64	7.92	9.38	11.04	11.77
			40	1.76	2.24	2.80	3.45	4.20	5.09	6.11	7.29	8.65	10.19	10.86
			50	1.62	2.06	2.56	3.14	3.83	4.62	5.55	6.62	7.85	9.26	9.87
		P	30	1.64	1.69	1.75	1.82	1.91	2.00	2.11	2.25	2.40	2.58	2.66
			40	1.95	2.01	2.07	2.15	2.23	2.32	2.43	2.55	2.69	2.86	2.93
			50	2.30	2.37	2.44	2.52	2.61	2.70	2.81	2.93	3.07	3.22	3.29
ZF11KQE	TF5 TFD	Q	30	2.38	3.01	3.75	4.62	5.63	6.81	8.16	9.70	11.46	13.44	14.30
			40	2.18	2.76	3.45	4.25	5.19	6.28	7.54	8.99	10.63	12.50	13.31
			50	1.98	2.51	3.12	3.84	4.69	5.68	6.83	8.16	9.68	11.40	12.16
		P	30	1.82	1.89	1.98	2.09	2.22	2.37	2.54	2.75	2.97	3.23	3.34
			40	2.16	2.24	2.33	2.44	2.57	2.72	2.89	3.08	3.29	3.53	3.63
			50	2.57	2.66	2.77	2.88	3.01	3.16	3.32	3.51	3.71	3.94	4.04
ZF13KQE	TF7 TFC TFD	Q	30	2.75	3.46	4.33	5.35	6.56	7.96	9.57	11.41	13.49	15.83	16.84
			40	2.54	3.20	3.99	4.94	6.04	7.33	8.81	10.51	12.43	14.60	15.54
			50	2.30	2.90	3.62	4.48	5.48	6.65	8.00	9.55	11.31	13.31	14.17
		P	30	2.17	2.29	2.41	2.53	2.64	2.75	2.85	2.95	3.04	3.12	3.14
			40	2.55	2.67	2.80	2.94	3.08	3.22	3.37	3.53	3.68	3.83	3.90
			50	2.97	3.08	3.21	3.36	3.52	3.70	3.88	4.09	4.30	4.52	4.61
ZF15KQE	TF7 TFC TFD	Q	30	3.38	4.27	5.32	6.57	8.02	9.70	11.63	13.82	16.29	19.06	20.25
			40	3.12	3.94	4.92	6.07	7.41	8.97	10.76	12.80	15.11	17.70	18.82
			50	2.83	3.57	4.46	5.50	6.73	8.15	9.79	11.67	13.80	16.20	17.24
		P	30	2.75	2.84	2.95	3.08	3.25	3.45	3.68	3.96	4.28	4.64	4.80
			40	3.21	3.32	3.44	3.58	3.74	3.94	4.16	4.42	4.73	5.07	5.22
			50	3.75	3.87	4.01	4.16	4.33	4.53	4.76	5.01	5.30	5.63	5.77
ZF18KQE	TF7 TFC TFD	Q	30	3.96	5.02	6.28	7.79	9.56	11.63	14.01	16.75	19.86	23.37	24.89
			40	3.65	4.62	5.79	7.17	8.79	10.68	12.87	15.39	18.26	21.50	22.91
			50	3.31	4.20	5.26	6.51	7.97	9.69	11.68	13.97	16.59	19.57	20.86
		P	30	3.38	3.43	3.52	3.66	3.83	4.03	4.23	4.44	4.63	4.81	4.88
			40	3.94	4.01	4.12	4.29	4.48	4.70	4.94	5.18	5.41	5.62	5.70
			50	4.57	4.66	4.80	4.98	5.21	5.46	5.73	6.00	6.27	6.53	6.62

Notes:
1. Q for capacity; P for power. Units in kW
2. All ZF*KQE values are rated at return gas temperature: 20°C and subcooling: 0 K

Performance data

TF7: 380 V, 3-Phase, 60 Hz ; **TFC**: 208-230 V, 3-Phase, 60 Hz ; **TFD**: 460 V, 3-Phase, 60 Hz

Liquid injection

R22

Model			Cond. temp. °C	Evap. temp. °C										
				-40	-35	-30	-25	-20	-15	-10	-5	0	5	7
ZF25KQE	TF7 TFC TFD	Q	30	4.97	6.29	7.88	9.76	11.99	14.58	17.57	21.00			
			40	4.57	5.80	7.26	8.99	11.02	13.39	16.14	19.30			
			50	4.15	5.27	6.59	8.16	10.00	12.15	14.64	17.52			
		P	30	4.24	4.30	4.42	4.59	4.81	5.05	5.30	5.56			
			40	4.95	5.02	5.17	5.37	5.62	5.90	6.19	6.49			
			50	5.74	5.84	6.01	6.25	6.53	6.85	7.18	7.52			
ZF28KQE	TF7 TFC TFD	Q	30	5.84	7.39	9.26	11.47	14.08	17.13	20.64	24.67			
			40	5.37	6.81	8.52	10.56	12.95	15.74	18.97	22.67			
			50	4.87	6.19	7.74	9.58	11.75	14.28	17.21	20.58			
		P	30	5.09	5.15	5.30	5.51	5.77	6.06	6.37	6.68			
			40	5.93	6.03	6.20	6.45	6.74	7.08	7.43	7.79			
			50	6.88	7.01	7.22	7.50	7.84	8.21	8.62	9.03			
ZF34KQE	TF7 TFC TFD	Q	30	6.40	8.16	10.27	12.76	15.68	19.06	22.96	27.40			
			40	5.79	7.46	9.43	11.75	14.45	17.58	21.18	25.28			
			50	5.08	6.64	8.47	10.59	13.07	15.92	19.21	22.96			
		P	30	5.21	5.42	5.64	5.86	6.10	6.33	6.58	6.82			
			40	5.96	6.27	6.58	6.88	7.17	7.46	7.73	8.00			
			50	6.83	7.25	7.66	8.04	8.41	8.75	9.07	9.37			
ZF41KQE	TF7 TFC TFD	Q	30	7.65	9.67	12.09	14.95	18.32	22.26	26.82	32.06			
			40	6.99	8.91	11.16	13.81	16.90	20.49	24.65	29.43			
			50	6.13	7.97	10.07	12.51	15.33	18.59	22.36	26.69			
		P	30	6.31	6.62	6.93	7.24	7.55	7.87	8.19	8.51			
			40	7.29	7.69	8.08	8.47	8.85	9.23	9.60	9.96			
			50	8.38	8.87	9.35	9.83	10.28	10.73	11.16	11.57			
ZF49KQE	TF7 TFC TFD	Q	30	9.41	11.83	14.82	18.41	22.63						
			40	8.56	10.84	13.63	16.97	20.88						
			50	7.50	9.64	12.24	15.32	18.93						
		P	30	7.81	8.04	8.36	8.73	9.14						
			40	9.06	9.35	9.74	10.18	10.67						
			50	10.58	10.92	11.36	11.88	12.44						
ZF54KQE	TF7 TFC TFD	Q	30	10.79	13.63	17.01	20.99	25.64						
			40	9.98	12.65	15.79	19.48	23.79						
			50	9.00	11.47	14.35	17.73	21.68						
		P	30	7.93	8.49	9.01	9.56	10.19						
			40	9.46	10.05	10.59	11.16	11.79						
			50	11.51	12.18	12.79	13.41	14.09						

Notes:
1. Q for capacity; P for power. Units in kW
2. All ZF*KQE values are rated at return gas temperature: 20°C and subcooling: 0 K

Performance data

TF7: 380 V, 3-Phase, 60 Hz ; **TFC**: 208-230 V, 3-Phase, 60 Hz ; **TFD**: 460 V, 3-Phase, 60 Hz

Vapor injection

R22

Model			Cond. temp. °C	Evap. temp. °C										
				-40	-35	-30	-25	-20	-15	-10	-5	0	5	7
ZFI20KQE	TF7 TFC TFD	Q	30	3.17	3.98	4.96	6.11	7.42	8.88	10.50	12.26	14.16	16.21	17.06
			40	3.16	3.98	4.96	6.08	7.35	8.75	10.30	11.97	13.77	15.70	16.50
			50	2.88	3.72	4.70	5.81	7.05	8.41	9.89	11.49	13.21	15.02	15.78
		P	30	2.47	2.52	2.62	2.76	2.93	3.14	3.36	3.62	3.88	4.16	4.28
			40	2.77	2.91	3.05	3.21	3.36	3.50	3.64	3.77	3.87	3.96	3.99
			50	3.46	3.65	3.81	3.94	4.04	4.10	4.12	4.09	4.00	3.86	3.79
		LO	30	-6.90	-5.80	-4.00	-1.40	1.80	5.30	8.90	12.50	16.00	19.30	20.50
			40	-5.00	-4.00	-2.00	0.90	4.40	8.10	12.00	15.90	19.60	23.10	24.40
			50	3.50	2.00	2.60	4.70	7.80	11.40	15.30	19.20	23.00	26.60	28.00
ZFI23KQE	TF7 TFC TFD	Q	30	4.22	5.36	6.68	8.22	9.99	12.00	14.30	16.90	19.80	23.10	24.50
			40	4.10	5.22	6.51	7.98	9.67	11.60	13.75	16.20	19.00	22.10	23.40
			50	3.90	5.00	6.25	7.67	9.27	11.10	13.15	15.45	18.05	21.00	22.20
		P	30	2.87	2.97	3.08	3.20	3.33	3.49	3.69	3.93	4.21	4.55	4.70
			40	3.45	3.59	3.73	3.87	4.02	4.18	4.37	4.58	4.83	5.13	5.26
			50	4.15	4.35	4.54	4.71	4.88	5.06	5.25	5.45	5.69	5.95	6.07
		LO	30	-11.40	-13.00	-14.50	-14.40	-12.60	-9.30	-4.80	0.20	5.40	10.40	12.30
			40	-15.60	-13.00	-12.20	-11.20	-9.10	-5.80	-1.60	3.10	8.00	12.70	14.60
			50	-10.60	-4.50	-2.30	-0.90	0.80	3.30	6.60	10.40	14.40	18.30	19.90
ZFI26KQE	TF7 TFC TFD	Q	30	4.70	5.84	7.28	8.97	10.89	12.99	15.24	17.60	20.04	22.51	23.50
			40	4.63	5.78	7.19	8.85	10.71	12.74	14.89	17.13	19.43	21.75	22.67
			50	4.20	5.36	6.77	8.41	10.23	12.20	14.27	16.42	18.60	20.78	21.64
		P	30	3.51	3.64	3.79	3.98	4.23	4.56	4.99	5.54	6.24	7.10	7.50
			40	3.95	4.20	4.42	4.63	4.85	5.10	5.41	5.79	6.27	6.86	7.14
			50	4.98	5.29	5.52	5.70	5.84	5.96	6.09	6.25	6.45	6.72	6.85
		LO	30	-3.00	-1.60	0.00	2.30	5.30	8.80	12.70	16.90	21.30	25.60	27.40
			40	-0.30	0.90	2.60	5.00	8.10	11.90	16.00	20.40	24.90	29.40	31.20
			50	7.70	6.90	7.30	9.00	11.70	15.30	19.40	23.80	28.40	33.10	34.90
ZFI36KQE	TF7 TFC TFD	Q	30	6.45	8.00	9.65	11.54	13.82	16.63	20.12	24.42			
			40	6.00	7.53	9.15	10.99	13.21	15.95	19.35	23.56			
			50	5.29	6.78	8.35	10.12	12.26	14.91	18.20	22.28			
		P	30	3.63	3.99	4.40	4.85	5.32	5.79	6.23	6.62			
			40	4.73	5.03	5.39	5.78	6.18	6.57	6.93	7.24			
			50	6.66	6.87	7.12	7.40	7.68	7.94	8.17	8.33			
		LO	30	-10.70	-10.10	-5.90	-1.70	0.80	1.10	-0.80	-4.70			
			40	-0.40	-1.40	1.80	5.30	7.40	7.40	5.30	1.30			
			50	6.70	5.20	8.30	11.80	13.90	13.90	11.70	7.60			
ZFI39KQE	TF7 TFC TFD	Q	30	7.41	9.17	11.08	13.27	15.89	19.09	23.01	27.81			
			40	6.89	8.64	10.51	12.64	15.20	18.32	22.14	26.82			
			50	6.08	7.78	9.58	11.64	14.10	17.11	20.81	25.35			
		P	30	4.10	4.47	4.93	5.44	5.96	6.47	6.93	7.30			
			40	5.31	5.63	6.03	6.48	6.93	7.35	7.71	7.98			
			50	7.46	7.68	7.97	8.28	8.60	8.88	9.09	9.19			
		LO	30	-17.90	-13.00	-8.60	-5.20	-2.70	-1.30	-0.90	-1.40			
			40	-5.00	-3.20	-0.60	2.00	3.90	5.10	5.30	4.80			
			50	3.60	4.00	6.10	8.60	10.60	11.80	12.10	11.50			

Notes:
1. Q for capacity, P for power. Units in kW; LO for liquid out temperature in °C
2. All ZF*KQE values are rated at return gas temperature: 20°C and max subcooling
3. 20K Superheat

Performance data

TF7: 380 V, 3-Phase, 60 Hz ; **TFC**: 208-230 V, 3-Phase, 60 Hz ; **TFD**: 460 V, 3-Phase, 60 Hz

Vapor injection

R22

Model			Cond. temp. °C	Evap. temp. °C										
				-40	-35	-30	-25	-20	-15	-10	-5	0	5	7
ZFI50KQE	TF7 TFC TFD	Q	30	9.02	11.02	13.28	15.92	19.08	22.86	27.41	32.84			
			40	8.34	10.35	12.59	15.18	18.25	21.93	26.34	31.61			
			50	7.30	9.29	11.47	13.98	16.94	20.48	24.72	29.80			
		P	30	4.88	5.27	5.82	6.44	7.07	7.64	8.09	8.34			
			40	6.28	6.64	7.12	7.67	8.22	8.69	9.02	9.14			
			50	8.83	9.07	9.42	9.82	10.20	10.50	10.63	10.54			
		LO	30	-12.80	-11.30	-7.40	-3.50	-0.90	-0.10	-0.90	-3.20			
			40	-2.10	-2.40	0.50	3.60	5.70	6.20	5.30	2.80			
			50	5.20	4.40	7.10	10.20	12.30	12.80	11.80	9.30			
ZFI59KQE	TF7 TFC TFD	Q	30	10.78	13.13	15.81	18.96	22.71	27.21	32.59	39.00			
			40	9.96	12.33	14.98	18.07	21.73	26.10	31.31	37.52			
			50	8.70	11.05	13.65	16.64	20.17	24.37	29.39	35.35			
		P	30	5.87	6.45	7.12	7.85	8.61	9.36	10.08	10.73			
			40	7.63	8.13	8.72	9.35	10.00	10.64	11.23	11.73			
			50	10.77	11.11	11.52	11.97	12.43	12.85	13.22	13.49			
		LO	30	-11.50	-8.10	-4.30	-1.10	1.20	2.50	2.80	2.30			
			40	0.30	1.20	3.40	5.80	7.70	8.70	8.90	8.20			
			50	7.60	7.70	9.80	12.20	14.10	15.20	15.50	14.90			
ZFI68KQE	TF7 TFC TFD	Q	30	12.64	15.56	18.75	22.45	26.88						
			40	11.73	14.64	17.78	21.40	25.71						
			50	10.30	13.15	16.20	19.70	23.86						
		P	30	7.03	7.49	8.25	9.16	10.07						
			40	8.97	9.40	10.10	10.91	11.70						
			50	12.57	12.85	13.37	13.98	14.53						
		LO	30	-8.50	-5.20	-1.30	2.10	4.50						
			40	2.80	3.70	6.30	8.90	10.80						
			50	10.50	10.40	12.60	15.20	17.10						
ZFI96KQE	TE7 TEC TED	Q	30	18.35	21.90	26.50	32.10	39.10	47.50	57.50	69.40			
			40	17.95	21.80	26.20	30.90	37.10	44.30	52.80	62.80			
			50			24.50	29.50	35.00	41.20	48.30	56.70			
		P	30	11.60	12.20	12.75	13.40	14.15	15.00	15.95	17.10			
			40	14.60	15.25	15.90	16.45	17.15	17.95	18.80	19.75			
			50			19.75	20.50	21.20	21.80	22.50	23.30			
		LO	30	-14.60	-3.80	3.30	7.50	9.70	10.40	9.90	8.60			
			40	-1.30	1.70	6.70	11.80	16.20	19.60	21.80	23.10			
			50			14.20	18.00	23.20	28.20	32.50	35.80			
ZFI122KQE	TE7 TEC TED	Q	30	23.12	27.63	33.35	40.48	49.23	59.83	72.48	87.40			
			40	22.59	27.44	32.99	38.94	46.69	55.83	66.58	79.16			
			50			30.92	37.15	44.07	51.94	60.87	71.39			
		P	30	14.17	14.86	15.58	16.38	17.27	18.30	19.48	20.86			
			40	17.80	18.63	19.41	20.05	20.93	21.88	22.92	24.09			
			50			24.10	24.98	25.81	26.57	27.50	28.49			
		LO	30	-14.60	-3.80	3.30	7.50	9.70	10.40	9.90	8.60			
			40	-1.30	1.70	6.70	11.80	16.20	19.60	21.80	23.10			
			50			14.20	18.00	23.20	28.20	32.50	35.90			
ZFI140KQE	TE7 TEC TED	Q	30	27.40	32.80	39.50	48.00	58.30	70.80	85.80	103.50			
			40	26.80	32.60	39.10	46.10	55.20	66.00	78.70	93.60			
			50			36.60	44.00	52.10	61.10	71.90	84.40			
		P	30	15.60	16.35	17.15	18.05	19.00	20.10	21.40	23.00			
			40	19.70	20.60	21.40	22.10	23.00	24.10	25.20	26.50			
			50			26.60	27.60	28.50	29.20	30.30	31.40			
		LO	30	-20.90	-9.90	-2.50	2.10	4.50	5.30	4.90	3.50			
			40	-6.90	-3.80	1.40	6.90	11.50	15.10	17.50	18.80			
			50			9.50	13.60	19.00	24.20	28.70	32.10			

Notes:
1. Q for capacity, P for power. Units in kW; LO for liquid out temperature in °C
2. All ZF*KQE values are rated at return gas temperature: 20°C and max subcooling
3. 20K Superheat

Performance data

TFC: 200 V, 3-Phase, 50 Hz ; **TFD**: 380-420 V, 3-Phase, 50 Hz

Liquid injection

R404A

Model			Cond. temp. °C	Evap. temp. °C										
				-40	-35	-30	-25	-20	-15	-10	-5	0	5	7
ZF06KQE	TF5 TFD	Q	30	1.28	1.61	2.00	2.47	3.01	3.64	4.38	5.22	6.19	7.28	7.76
			40	1.13	1.43	1.77	2.18	2.65	3.21	3.85	4.58	5.43	6.39	6.81
			50	0.96	1.22	1.51	1.85	2.25	2.71	3.25	3.87	4.59	5.41	5.77
		P	30	1.17	1.23	1.30	1.37	1.45	1.54	1.64	1.75	1.87	2.00	2.05
			40	1.40	1.46	1.52	1.59	1.67	1.76	1.85	1.96	2.08	2.20	2.26
			50	1.72	1.77	1.82	1.89	1.96	2.04	2.13	2.24	2.35	2.47	2.52
ZF08KQE	TF5 TFD	Q	30	1.58	1.98	2.46	3.03	3.70	4.48	5.38	6.42	7.61	8.96	9.54
			40	1.39	1.75	2.18	2.68	3.26	3.94	4.73	5.64	6.68	7.86	8.37
			50	1.18	1.50	1.86	2.28	2.77	3.34	4.00	4.76	5.64	6.65	7.10
		P	30	1.39	1.47	1.54	1.63	1.73	1.84	1.95	2.08	2.22	2.37	2.44
			40	1.67	1.74	1.81	1.89	1.99	2.09	2.21	2.33	2.47	2.62	2.69
			50	2.05	2.10	2.17	2.25	2.33	2.43	2.54	2.66	2.79	2.94	3.00
ZF09KQE	TF5 TFD	Q	30	1.71	2.17	2.71	3.35	4.10	4.97	5.97	7.13	8.45	9.96	10.61
			40	1.53	1.94	2.41	2.96	3.60	4.35	5.23	6.23	7.39	8.71	9.29
			50	1.32	1.67	2.07	2.52	3.06	3.69	4.42	5.27	6.25	7.38	7.88
		P	30	1.46	1.48	1.52	1.57	1.65	1.74	1.84	1.96	2.09	2.23	2.29
			40	1.77	1.78	1.81	1.86	1.92	2.00	2.10	2.21	2.33	2.47	2.52
			50	2.16	2.16	2.18	2.22	2.27	2.34	2.43	2.53	2.65	2.78	2.84
ZF11KQE	TF5 TFD	Q	30	2.17	2.74	3.41	4.19	5.10	6.16	7.41	8.85	10.50	12.39	13.22
			40	1.94	2.45	3.03	3.70	4.49	5.41	6.49	7.75	9.20	10.86	11.60
			50	1.65	2.09	2.58	3.15	3.81	4.58	5.48	6.55	7.78	9.22	9.86
		P	30	1.79	1.82	1.87	1.94	2.03	2.14	2.27	2.41	2.57	2.75	2.83
			40	2.13	2.15	2.20	2.26	2.34	2.45	2.57	2.70	2.85	3.02	3.09
			50	2.53	2.56	2.60	2.67	2.75	2.85	2.97	3.10	3.24	3.40	3.47
ZF13KQE	TFC TFD	Q	30	2.45	3.15	3.98	4.93	6.03	7.30	8.74	10.36	12.19	14.24	15.12
			40	2.19	2.78	3.48	4.31	5.27	6.38	7.66	9.11	10.76	12.61	13.41
			50	1.94	2.40	2.95	3.62	4.42	5.35	6.44	7.70	9.13	10.77	11.48
		P	30	1.87	1.93	2.00	2.08	2.19	2.30	2.44	2.59	2.76	2.95	3.03
			40	2.27	2.33	2.41	2.49	2.59	2.70	2.83	2.97	3.13	3.30	3.37
			50	2.78	2.85	2.93	3.02	3.12	3.23	3.35	3.48	3.62	3.78	3.85
ZF15KQE	TFC TFD	Q	30	3.01	3.89	4.91	6.08	7.44	9.01	10.82	12.89	15.26	17.93	19.10
			40	2.66	3.42	4.29	5.30	6.47	7.84	9.43	11.26	13.36	15.76	16.81
			50	2.36	2.95	3.64	4.44	5.40	6.53	7.86	9.41	11.22	13.31	14.22
		P	30	2.21	2.33	2.45	2.58	2.73	2.90	3.09	3.31	3.56	3.85	3.97
			40	2.68	2.82	2.95	3.09	3.24	3.41	3.60	3.80	4.04	4.30	4.41
			50	3.26	3.42	3.58	3.73	3.90	4.07	4.25	4.45	4.67	4.92	5.02
ZF18KQE	TFC TFD	Q	30	3.70	4.70	5.85	7.20	8.78	10.64	12.81	15.33	18.25	21.58	23.04
			40	3.29	4.17	5.17	6.34	7.70	9.30	11.17	13.36	15.91	18.84	20.13
			50	2.81	3.57	4.41	5.37	6.50	7.83	9.40	11.25	13.42	15.94	17.06
		P	30	2.79	2.89	3.01	3.14	3.29	3.46	3.65	3.85	4.07	4.30	4.40
			40	3.29	3.40	3.53	3.67	3.83	4.00	4.18	4.38	4.59	4.82	4.91
			50	3.92	4.04	4.18	4.33	4.49	4.67	4.85	5.05	5.26	5.48	5.57

Notes:
1. Q for capacity; P for power. Units in kW
2. All ZF*KQE values are rated at return gas temperature: 20°C and subcooling: 0 K

Performance data

TFC: 200 V, 3-Phase, 50 Hz ; **TFD**: 380-420 V, 3-Phase, 50 Hz

Liquid injection

R404A

Model			Cond. temp. °C	Evap. temp. °C										
				-40	-35	-30	-25	-20	-15	-10	-5	0	5	7
ZF25KQE	TFC TFD	Q	30	4.59	5.81	7.32	9.08	11.09	13.32	15.75	18.37			
			40	4.09	5.12	6.42	7.96	9.73	11.71	13.87	16.20			
			50	3.63	4.45	5.50	6.79	8.28	9.96	11.81	13.82			
		P	30	3.03	3.31	3.54	3.76	4.00	4.30	4.67	5.16			
			40	3.43	3.80	4.11	4.39	4.69	5.03	5.44	5.95			
			50	3.84	4.31	4.72	5.09	5.46	5.85	6.32	6.87			
ZF28KQE	TFC TFD	Q	30	5.25	6.65	8.36	10.38	12.67	15.22	18.00	21.00			
			40	4.67	5.85	7.34	9.10	11.12	13.38	15.85	18.51			
			50	4.15	5.08	6.29	7.76	9.46	11.39	13.50	15.79			
		P	30	3.74	4.08	4.37	4.64	4.94	5.30	5.76	6.37			
			40	4.23	4.68	5.07	5.42	5.78	6.20	6.71	7.34			
			50	4.74	5.32	5.82	6.28	6.73	7.22	7.79	8.48			
ZF34KQE	TFC TFD	Q	30	6.03	7.72	9.67	11.94	14.57	17.62	21.16	25.23			
			40	5.30	6.82	8.54	10.51	12.79	15.44	18.51	22.06			
			50	4.47	5.79	7.25	8.90	10.81	13.01	15.59	18.58			
		P	30	4.18	4.41	4.67	4.93	5.22	5.53	5.85	6.20			
			40	4.85	5.16	5.46	5.77	6.08	6.40	6.73	7.07			
			50	5.66	6.04	6.41	6.77	7.13	7.48	7.82	8.16			
ZF41KQE	TFC TFD	Q	30	7.57	9.62	11.96	14.69	17.88	21.62	25.98	31.04			
			40	6.71	8.56	10.62	12.98	15.71	18.90	22.64	26.99			
			50	5.65	7.29	9.06	11.04	13.31	15.96	19.05	22.68			
		P	30	5.07	5.40	5.75	6.11	6.48	6.88	7.30	7.75			
			40	5.95	6.33	6.72	7.12	7.52	7.94	8.36	8.81			
			50	6.95	7.40	7.85	8.29	8.74	9.18	9.63	10.09			
ZF49KQE	TFC TFD	Q	30	9.14	11.54	14.39	17.75	21.67						
			40	8.07	10.21	12.72	15.65	19.05						
			50	6.80	8.66	10.80	13.27	16.14						
		P	30	6.24	6.53	6.90	7.33	7.81						
			40	7.36	7.67	8.06	8.52	9.02						
			50	8.73	9.07	9.48	9.97	10.51						
ZF54KQE	TFC TFD	Q	30	10.46	13.21	16.47	20.31	24.80						
			40	9.23	11.69	14.56	17.91	21.80						
			50	7.78	9.91	12.36	15.19	18.47						
		P	30	7.14	7.47	7.90	8.39	8.94						
			40	8.42	8.77	9.22	9.75	10.33						
			50	9.99	10.37	10.85	11.41	12.03						

Notes:
1. Q for capacity; P for power. Units in kW
2. All ZF*KQE values are rated at return gas temperature: 20°C and subcooling: 0 K

Performance data

R404A

TFC: 200 V, 3-Phase, 50 Hz ; **TFD**: 380-420 V, 3-Phase, 50 Hz

Vapor injection

Model			Cond. temp. °C	Evap. temp. °C										
				-40	-35	-30	-25	-20	-15	-10	-5	0	5	7
ZFI20KQE	TFC TFD	Q	30	3.43	4.28	5.23	6.30	7.50	8.86	10.40	12.14	14.09	16.28	17.23
			40	3.25	4.07	4.99	6.04	7.23	8.60	10.14	11.90	13.88	16.11	17.08
			50	2.92	3.70	4.59	5.62	6.80	8.17	9.73	11.50	13.51	15.76	16.74
		P	30	2.17	2.23	2.30	2.38	2.46	2.53	2.58	2.62	2.62	2.59	2.57
			40	2.73	2.78	2.84	2.92	3.01	3.09	3.16	3.22	3.25	3.27	3.26
			50	3.56	3.58	3.62	3.68	3.75	3.82	3.90	3.96	4.01	4.04	4.05
		LO	30	-13.50	-9.80	-6.10	-2.00	2.30	6.50	10.50	14.20	17.40	20.00	20.90
			40	-6.70	-4.80	-2.20	1.00	4.60	8.30	12.00	15.40	18.20	20.60	21.40
			50	6.00	4.80	5.10	6.50	8.90	11.60	14.50	17.20	19.70	21.80	22.50
ZFI23KQE	TFC TFD	Q	30	4.85	5.51	6.46	7.67	9.13	10.80	12.75	14.85	17.15	19.65	20.70
			40	4.78	5.36	6.23	7.35	8.73	10.35	12.20	14.25	16.45	18.90	19.90
			50	4.78	5.26	6.01	7.04	8.31	9.82	11.55	13.50	15.65	18.00	18.95
		P	30	2.68	2.82	2.96	3.09	3.21	3.32	3.44	3.55	3.66	3.76	3.80
			40	3.19	3.38	3.55	3.72	3.87	4.02	4.15	4.28	4.40	4.51	4.55
			50	3.90	4.13	4.35	4.55	4.73	4.90	5.05	5.19	5.32	5.43	5.48
		LO	30	-33.40	-15.50	-6.10	-0.50	3.60	7.10	10.60	13.90	17.30	20.40	21.60
			40	-28.70	-12.10	-3.00	2.70	6.80	10.40	13.80	17.20	20.40	23.50	24.70
			50	-25.90	-9.70	-0.40	5.60	10.00	13.80	17.40	20.80	24.10	27.10	28.20
ZFI26KQE	TFC TFD	Q	30	5.14	6.29	7.61	9.14	10.90	12.91	15.20	17.79	20.72	24.02	25.44
			40	5.09	6.12	7.33	8.74	10.39	12.30	14.49	17.01	19.86	23.06	24.45
			50	5.08	5.97	7.03	8.32	9.84	11.62	13.70	16.10	18.83	21.94	23.30
		P	30	3.22	3.38	3.54	3.70	3.84	3.98	4.11	4.24	4.37	4.50	4.55
			40	3.85	4.07	4.28	4.47	4.65	4.81	4.97	5.12	5.26	5.39	5.44
			50	4.74	5.01	5.26	5.50	5.70	5.90	6.07	6.24	6.38	6.52	6.57
		LO	30	-13.00	-8.10	-4.00	-0.10	3.70	7.20	10.50	13.60	16.10	18.10	18.80
			40	-10.10	-5.20	-0.80	3.30	7.30	10.90	14.20	17.10	19.50	21.50	22.10
			50	-7.30	-2.10	2.60	7.00	11.10	14.90	18.20	21.00	23.40	25.10	25.70
ZFI36KQE	TFC TFD	Q	30	6.48	8.01	9.76	11.70	13.85	16.20	18.73	21.45			
			40	6.29	7.67	9.27	11.08	13.09	15.32	17.74	20.32			
			50	6.24	7.42	8.82	10.43	12.26	14.30	16.54	18.97			
		P	30	3.78	4.05	4.29	4.52	4.75	4.97	5.19	5.42			
			40	4.46	4.86	5.21	5.52	5.80	6.05	6.27	6.47			
			50	5.21	5.78	6.29	6.72	7.09	7.42	7.69	7.91			
		LO	30	-13.80	-10.00	-5.40	-0.70	3.90	8.10	12.00	15.40			
			40	-10.80	-5.80	-0.50	4.50	9.10	13.20	16.90	20.20			
			50	-11.10	-3.70	3.00	9.00	14.20	18.50	22.30	25.40			
ZFI39KQE	TFC TFD	Q	30	7.44	9.19	11.19	13.43	15.89	18.58	21.49	24.61			
			40	7.22	8.80	10.63	12.71	15.04	17.58	20.35	23.34			
			50	7.16	8.51	10.12	11.97	14.06	16.41	18.97	21.76			
		P	30	4.49	4.81	5.10	5.38	5.64	5.91	6.17	6.45			
			40	5.30	5.78	6.19	6.56	6.90	7.19	7.46	7.70			
			50	6.19	6.87	7.47	7.99	8.43	8.82	9.14	9.40			
		LO	30	-13.80	-10.00	-5.40	-0.70	3.90	8.10	12.00	15.40			
			40	-10.80	-5.80	-0.50	4.50	9.00	13.20	16.90	20.10			
			50	-11.10	-3.70	3.00	9.00	14.20	18.50	22.30	25.40			
ZFI50KQE	TFC TFD	Q	30	9.11	10.80	12.99	15.63	18.68	22.06	25.71	29.59			
			40	8.66	10.29	12.40	14.91	17.77	20.94	24.34	27.91			
			50	8.04	9.65	11.68	14.07	16.79	19.75	22.91	26.23			
		P	30	5.04	5.42	5.76	6.08	6.38	6.67	6.98	7.31			
			40	6.06	6.49	6.89	7.26	7.61	7.97	8.33	8.72			
			50	7.31	7.79	8.25	8.67	9.09	9.50	9.92	10.38			
		LO	30	-18.10	-7.60	-2.60	0.50	3.40	6.70	10.50	14.80			
			40	-12.10	-2.70	1.90	5.00	8.10	11.70	15.70	20.20			
			50	-3.60	3.70	7.30	10.10	13.10	16.70	20.80	25.20			

Notes:
1. Q for capacity, P for power. Units in kW; LO for liquid out temperature in °C
2. All ZF*KQE values are rated at return gas temperature: 20°C and max subcooling
3. 20K Superheat

Performance data

R404A

TFC: 200 V, 3-Phase, 50 Hz ; **TFD**: 380-420 V, 3-Phase, 50 Hz

Vapor injection

Model			Cond. temp. °C	Evap. temp. °C										
				-40	-35	-30	-25	-20	-15	-10	-5	0	5	7
ZFI59KQE	TFC TFD	Q	30	11.10	13.15	15.82	19.05	22.74	26.86	31.31	36.02			
			40	10.55	12.53	15.09	18.16	21.65	25.51	29.65	34.01			
			50	9.80	11.75	14.21	17.14	20.45	24.05	27.92	31.93			
		P	30	6.15	6.61	7.03	7.41	7.77	8.14	8.51	8.92			
			40	7.39	7.91	8.39	8.85	9.29	9.72	10.17	10.65			
			50	8.92	9.51	10.05	10.58	11.09	11.58	12.11	12.66			
		LO	30	-15.40	-5.10	-0.30	2.70	5.60	8.80	12.60	16.70			
			40	-9.50	-0.30	4.20	7.20	10.20	13.60	17.50	21.80			
			50	-1.20	5.90	9.50	12.10	15.00	18.60	22.50	26.90			
ZFI68KQE	TFC TFD	Q	30	12.60	14.92	17.95	21.61	25.81						
			40	11.97	14.23	17.13	20.60	24.56						
			50	11.12	13.33	16.14	19.45	23.20						
		P	30	7.15	7.68	8.17	8.62	9.04						
			40	8.60	9.20	9.77	10.29	10.80						
			50	10.36	11.05	11.70	12.30	12.89						
		LO	30	-15.40	-5.10	-0.30	2.70	5.50						
			40	-9.60	-0.40	4.10	7.20	10.20						
			50	-1.20	5.90	9.40	12.10	15.00						
ZFI81KQE	TFC TFD	Q	30	14.37	17.01	20.46	24.63	29.43						
			40	13.66	16.23	19.55	23.50	28.03						
			50	12.68	15.21	18.41	22.18	26.47						
		P	30	8.26	8.87	9.44	9.96	10.45						
			40	9.94	10.64	11.30	11.90	12.49						
			50	11.98	12.78	13.53	14.23	14.91						
		LO	30	-10.00	-0.20	4.40	7.30	9.90						
			40	-4.50	4.20	8.50	11.40	14.20						
			50	3.50	10.20	13.60	16.10	18.80						
ZFI96KQE	TEC TED	Q	30	18.35	22.00	26.50	32.20	39.10	47.50	57.60	69.40			
			40	17.45	21.30	25.70	30.90	37.10	44.40	52.90	62.90			
			50	14.30	18.70	24.20	29.20	34.80	41.10	48.40	56.80			
		P	30	10.75	11.30	11.85	12.45	13.10	13.90	14.80	15.85			
			40	13.30	13.95	14.60	15.25	15.90	16.60	17.40	18.30			
			50	16.85	17.80	18.10	18.80	19.50	20.20	20.90	21.60			
		LO	30	-10.40	-2.80	2.10	5.00	6.40	6.60	5.90	4.60			
			40	-0.90	1.10	4.60	8.10	11.00	13.20	14.60	15.20			
			50	16.20	10.20	10.00	12.50	16.10	19.50	22.40	24.40			
ZFI122KQE	TEC TED	Q	30	23.14	27.67	33.39	40.53	49.30	59.91	72.57	87.50			
			40	21.96	26.81	32.42	38.99	46.75	55.91	66.68	79.27			
			50	18.04	23.62	30.52	36.81	43.84	51.83	60.98	71.51			
		P	30	13.14	13.77	14.45	15.18	16.01	16.96	18.06	19.33			
			40	16.21	17.02	17.80	18.59	19.40	20.28	21.24	22.32			
			50	20.57	21.72	22.09	22.95	23.78	24.62	25.48	26.39			
		LO	30	-10.40	-2.80	2.10	5.00	6.40	6.60	5.90	4.60			
			40	-0.90	1.10	4.60	8.10	11.00	13.20	14.60	15.20			
			50	16.20	10.20	10.00	12.50	16.10	19.50	22.40	24.40			
ZFI140KQE	TEC TED	Q	30	25.70	30.70	37.00	44.90	54.60	66.50	80.60	97.20			
			40	24.30	29.50	35.70	43.00	51.60	61.90	73.90	87.90			
			50	19.80	27.20	33.60	40.50	48.30	57.30	67.50	79.20			
		P	30	14.30	15.05	15.80	16.60	17.50	18.50	19.65	21.00			
			40	17.70	18.60	19.50	20.30	21.20	22.10	23.10	24.30			
			50	22.40	23.10	24.10	25.10	25.90	26.80	27.80	28.80			
		LO	30	-8.00	0.00	4.90	7.60	8.80	8.90	8.10	6.80			
			40	2.20	4.60	7.90	11.10	13.80	15.70	16.80	17.30			
			50	18.80	13.50	13.30	15.60	18.80	21.90	24.50	26.40			

Notes:
1. Q for capacity, P for power. Units in kW; LO for liquid out temperature in °C
2. All ZF*KQE values are rated at return gas temperature: 20°C and max subcooling
3. 20K Superheat

Performance data

TF7: 380 V, 3-Phase, 60 Hz ; **TFC** : 208-230 V, 3-Phase, 60 Hz ; **TFD** : 460 V, 3-Phase, 60 Hz

Liquid injection

R404A

Model			Cond. temp. °C	Evap. temp. °C										
				-40	-35	-30	-25	-20	-15	-10	-5	0	5	7
ZF06KQE	TF5 TFD	Q	30	1.49	1.90	2.36	2.90	3.53	4.26	5.12	6.12	7.27	8.59	9.17
			40	1.30	1.67	2.09	2.56	3.10	3.74	4.48	5.34	6.34	7.49	7.99
			50	1.11	1.45	1.80	2.20	2.65	3.17	3.78	4.49	5.32	6.29	6.72
		P	30	1.27	1.29	1.34	1.43	1.52	1.63	1.74	1.84	1.93	1.99	2.00
			40	1.57	1.57	1.60	1.67	1.77	1.88	2.00	2.12	2.22	2.32	2.34
			50	1.94	1.90	1.92	1.97	2.06	2.17	2.30	2.43	2.56	2.68	2.72
ZF08KQE	TF5 TFD	Q	30	1.90	2.39	2.98	3.66	4.47	5.42	6.51	7.76	9.20	10.83	11.53
			40	1.68	2.12	2.64	3.24	3.95	4.77	5.72	6.81	8.07	9.50	10.12
			50	1.42	1.81	2.25	2.76	3.35	4.03	4.83	5.76	6.82	8.04	8.58
		P	30	1.57	1.63	1.71	1.80	1.92	2.04	2.17	2.32	2.46	2.61	2.66
			40	1.91	1.95	2.01	2.09	2.20	2.32	2.45	2.60	2.75	2.91	2.98
			50	2.40	2.40	2.44	2.50	2.59	2.69	2.82	2.96	3.11	3.27	3.34
ZF09KQE	TF5 TFD	Q	30	2.11	2.67	3.32	4.08	4.98	6.02	7.23	8.62	10.23	12.05	12.85
			40	1.87	2.37	2.94	3.60	4.37	5.27	6.32	7.53	8.93	10.54	11.24
			50	1.60	2.03	2.51	3.06	3.71	4.46	5.34	6.36	7.56	8.94	9.55
		P	30	1.58	1.63	1.69	1.78	1.88	2.01	2.15	2.31	2.49	2.68	2.76
			40	1.92	1.95	2.01	2.09	2.18	2.30	2.44	2.59	2.76	2.95	3.03
			50	2.34	2.37	2.41	2.48	2.56	2.67	2.80	2.95	3.12	3.30	3.38
ZF11KQE	TF5 TFD	Q	30	2.60	3.30	4.11	5.07	6.19	7.49	8.99	10.72	12.68	14.90	15.87
			40	2.33	2.94	3.65	4.48	5.46	6.59	7.90	9.41	11.13	13.10	13.95
			50	1.99	2.52	3.11	3.81	4.62	5.57	6.68	7.96	9.44	11.14	11.88
		P	30	1.90	1.97	2.06	2.18	2.33	2.50	2.70	2.92	3.17	3.45	3.57
			40	2.30	2.37	2.46	2.57	2.71	2.86	3.05	3.25	3.48	3.74	3.85
			50	2.79	2.86	2.95	3.06	3.19	3.35	3.52	3.71	3.93	4.17	4.27
ZF13KQE	TF7 TFC TFD	Q	30	2.95	3.80	4.79	5.93	7.24	8.73	10.40	12.29	14.40	16.74	17.74
			40	2.60	3.32	4.16	5.15	6.31	7.63	9.14	10.85	12.77	14.92	15.85
			50	2.28	2.83	3.50	4.31	5.27	6.39	7.70	9.20	10.91	12.84	13.68
		P	30	2.24	2.30	2.39	2.50	2.65	2.82	3.03	3.28	3.56	3.89	4.03
			40	2.70	2.76	2.85	2.95	3.09	3.25	3.44	3.67	3.92	4.22	4.35
			50	3.30	3.37	3.45	3.55	3.68	3.83	4.01	4.21	4.45	4.71	4.83
ZF15KQE	TF7 TFC TFD	Q	30	3.74	4.72	5.88	7.25	8.86	10.73	12.90	15.40	18.26	21.50	22.91
			40	3.30	4.16	5.17	6.35	7.74	9.36	11.24	13.41	15.91	18.76	20.00
			50	2.81	3.54	4.38	5.36	6.51	7.85	9.43	11.27	13.39	15.83	16.90
		P	30	2.70	2.79	2.92	3.07	3.26	3.49	3.78	4.13	4.54	5.02	5.24
			40	3.19	3.34	3.49	3.66	3.85	4.07	4.32	4.62	4.96	5.36	5.54
			50	3.77	3.98	4.19	4.40	4.62	4.84	5.08	5.36	5.66	6.01	6.16
ZF18KQE	TF7 TFC TFD	Q	30	4.46	5.67	7.07	8.70	10.61	12.84	15.43	18.42	21.87	25.81	27.53
			40	3.98	5.05	6.26	7.66	9.29	11.21	13.44	16.04	19.05	22.51	24.03
			50	3.47	4.37	5.37	6.53	7.87	9.46	11.32	13.51	16.06	19.03	20.34
		P	30	3.27	3.37	3.52	3.72	3.96	4.24	4.55	4.88	5.23	5.59	5.73
			40	3.88	3.98	4.13	4.34	4.59	4.87	5.19	5.53	5.88	6.24	6.39
			50	4.57	4.68	4.85	5.07	5.33	5.63	5.96	6.31	6.68	7.05	7.20

Notes:
1. Q for capacity; P for power. Units in kW
2. All ZF*KQE values are rated at return gas temperature: 20°C and subcooling: 0 K

Performance data

TF7: 380 V, 3-Phase, 60 Hz ; **TFC** : 208-230 V, 3-Phase, 60 Hz ; **TFD** : 460 V, 3-Phase, 60 Hz

Liquid injection

R404A

Model			Cond. temp. °C	Evap. temp. °C										
				-40	-35	-30	-25	-20	-15	-10	-5	0	5	7
ZF25KQE	TF7 TFC TFD	Q	30	5.52	7.01	8.78	10.86	13.27	16.05	19.21	22.79			
			40	4.93	6.19	7.72	9.53	11.67	14.15	17.01	20.27			
			50	4.44	5.42	6.65	8.15	9.96	12.10	14.60	17.48			
		P	30	3.63	3.96	4.28	4.60	4.90	5.21	5.53	5.87			
			40	4.06	4.50	4.91	5.30	5.68	6.04	6.41	6.78			
			50	4.46	5.03	5.56	6.06	6.52	6.97	7.40	7.82			
ZF28KQE	TF7 TFC TFD	Q	30	6.31	8.01	10.03	12.41	15.16	18.33	21.94	26.03			
			40	5.63	7.07	8.82	10.89	13.33	16.17	19.43	23.15			
			50	5.07	6.19	7.59	9.31	11.38	13.82	16.67	19.97			
		P	30	4.47	4.89	5.29	5.67	6.05	6.43	6.83	7.25			
			40	5.00	5.55	6.06	6.54	7.00	7.45	7.90	8.36			
			50	5.50	6.21	6.86	7.47	8.05	8.59	9.12	9.64			
ZF34KQE	TF7 TFC TFD	Q	30	7.22	9.25	11.58	14.29	17.44	21.10	25.33	30.21			
			40	6.34	8.16	10.22	12.59	15.32	18.49	22.16	26.41			
			50	5.35	6.93	8.68	10.66	12.94	15.58	18.66	22.24			
		P	30	5.08	5.37	5.68	6.01	6.36	6.73	7.13	7.55			
			40	5.91	6.28	6.65	7.02	7.40	7.79	8.19	8.60			
			50	6.89	7.35	7.80	8.25	8.68	9.10	9.52	9.93			
ZF41KQE	TF7 TFC TFD	Q	30	9.12	11.59	14.41	17.70	21.55	26.05	31.30	37.40			
			40	8.09	10.31	12.80	15.64	18.93	22.78	27.27	32.51			
			50	6.81	8.79	10.92	13.30	16.04	19.22	22.96	27.33			
		P	30	6.11	6.51	6.92	7.36	7.81	8.29	8.80	9.34			
			40	7.17	7.63	8.10	8.57	9.06	9.56	10.08	10.61			
			50	8.37	8.92	9.45	9.99	10.52	11.06	11.60	12.15			
ZF49KQE	TF7 TFC TFD	Q	30	11.01	13.90	17.34	21.38	26.11						
			40	9.72	12.31	15.33	18.85	22.95						
			50	8.19	10.44	13.01	15.99	19.44						
		P	30	7.52	7.87	8.31	8.83	9.41						
			40	8.86	9.24	9.71	10.26	10.87						
			50	10.52	10.92	11.43	12.01	12.67						
ZF54KQE	TF7 TFC TFD	Q	30	12.55	15.85	19.76	24.38	29.76						
			40	11.08	14.03	17.47	21.49	26.17						
			50	9.33	11.90	14.83	18.23	22.16						
		P	30	8.57	8.97	9.48	10.07	10.73						
			40	10.10	10.53	11.07	11.70	12.39						
			50	11.99	12.45	13.02	13.69	14.44						

Notes:
1. Q for capacity; P for power. Units in kW
2. All ZF*KQE values are rated at return gas temperature: 20°C and subcooling: 0 K

Performance data

TF7: 380 V, 3-Phase, 60 Hz ; **TFC** : 208-230 V, 3-Phase, 60 Hz ; **TFD** : 460 V, 3-Phase, 60 Hz

Vapor injection

R404A

Model			Cond. temp. °C	Evap. temp. °C										
				-40	-35	-30	-25	-20	-15	-10	-5	0	5	7
ZFI20KQE	TF7 TFC TFD	Q	30	4.27	5.27	6.40	7.69	9.15	10.81	12.68	14.80	17.16	19.82	20.96
			40	4.21	5.16	6.25	7.48	8.89	10.50	12.32	14.38	16.71	19.30	20.43
			50	4.01	4.91	5.95	7.13	8.49	10.05	11.82	13.84	16.11	18.67	19.78
		P	30	2.65	2.79	2.93	3.05	3.16	3.26	3.35	3.43	3.49	3.55	3.57
			40	3.24	3.41	3.57	3.72	3.86	3.99	4.10	4.21	4.31	4.39	4.42
			50	4.00	4.19	4.38	4.55	4.71	4.87	5.01	5.15	5.28	5.40	5.45
		LO	30	-9.30	-6.50	-3.30	0.20	3.90	7.70	11.30	14.50	17.50	19.80	20.60
			40	-9.40	-6.00	-2.40	1.60	5.70	9.80	13.50	16.90	19.80	22.20	22.90
			50	-7.10	-3.50	0.40	4.70	8.90	13.00	16.80	20.10	22.90	25.10	25.80
ZFI23KQE	TF7 TFC TFD	Q	30	5.77	6.56	7.69	9.13	10.85	12.90	15.15	17.70	20.40	23.40	24.60
			40	5.69	6.38	7.41	8.75	10.40	12.30	14.50	16.95	19.60	22.50	23.70
			50	5.69	6.26	7.16	8.37	9.89	11.70	13.75	16.10	18.65	21.40	22.60
		P	30	3.16	3.33	3.49	3.64	3.78	3.92	4.06	4.19	4.31	4.44	4.49
			40	3.76	3.98	4.19	4.39	4.57	4.74	4.90	5.05	5.19	5.32	5.37
			50	4.60	4.88	5.13	5.37	5.58	5.78	5.96	6.13	6.28	6.41	6.46
		LO	30	-31.80	-14.00	-4.70	0.80	4.70	8.20	11.50	14.90	18.20	21.40	22.60
			40	-27.20	-10.70	-1.70	3.80	7.80	11.30	14.70	18.10	21.40	24.50	25.70
			50	-24.10	-8.10	1.00	6.70	11.00	14.80	18.30	21.70	25.00	28.00	29.20
ZFI26KQE	TF7 TFC TFD	Q	30	6.30	7.81	9.47	11.34	13.43	15.81	18.50	21.55	24.98	28.86	30.55
			40	6.03	7.47	9.04	10.79	12.76	14.98	17.49	20.35	23.58	27.23	28.81
			50	5.64	6.99	8.46	10.08	11.89	13.94	16.27	18.91	21.90	25.29	26.77
		P	30	3.80	4.05	4.30	4.55	4.80	5.07	5.34	5.64	5.97	6.33	6.49
			40	4.50	4.83	5.15	5.46	5.75	6.04	6.34	6.64	6.95	7.29	7.43
			50	5.46	5.89	6.28	6.64	6.98	7.30	7.61	7.92	8.22	8.54	8.67
		LO	30	-12.20	-8.00	-4.10	-0.10	3.90	7.80	11.30	14.40	17.20	19.20	19.90
			40	-9.60	-4.70	-0.20	4.30	8.60	12.60	16.20	19.30	21.90	23.90	24.50
			50	-5.80	-0.30	4.80	9.60	14.10	18.20	21.80	24.90	27.40	29.20	29.80
ZFI36KQE	TF7 TFC TFD	Q	30	7.73	9.58	11.62	13.92	16.56	19.64	23.23	27.39			
			40	7.53	9.15	10.97	13.08	15.56	18.50	21.95	26.01			
			50	7.74	9.00	10.49	12.29	14.48	17.14	20.35	24.21			
		P	30	4.46	4.84	5.16	5.45	5.73	6.03	6.38	6.79			
			40	5.25	5.74	6.17	6.56	6.95	7.36	7.80	8.31			
			50	6.26	6.85	7.37	7.88	8.38	8.89	9.44	10.08			
		LO	30	-12.60	-9.00	-4.10	0.60	4.70	7.70	9.80	11.00			
			40	-9.90	-3.90	2.10	7.10	10.80	13.40	14.90	15.50			
			50	-16.10	-3.90	5.40	12.10	16.70	19.50	20.90	21.00			
ZFI39KQE	TF7 TFC TFD	Q	30	8.89	11.02	13.36	16.01	19.06	22.59	26.72	31.51			
			40	8.66	10.53	12.62	15.05	17.90	21.28	25.25	29.93			
			50	8.91	10.35	12.06	14.14	16.65	19.72	23.41	27.86			
		P	30	5.35	5.80	6.18	6.53	6.87	7.23	7.65	8.14			
			40	6.29	6.88	7.39	7.87	8.33	8.82	9.35	9.96			
			50	7.51	8.21	8.84	9.45	10.04	10.66	11.32	12.08			
		LO	30	-12.60	-9.00	-4.10	0.60	4.70	7.70	9.80	11.00			
			40	-9.90	-3.90	2.10	7.10	10.80	13.40	14.90	15.50			
			50	-16.10	-3.90	5.40	12.10	16.70	19.50	20.90	21.00			
ZFI50KQE	TF7 TFC TFD	Q	30	10.79	12.78	15.38	18.52	22.10	26.11	30.43	35.02			
			40	10.25	12.19	14.67	17.65	21.05	24.80	28.83	33.06			
			50	9.53	11.42	13.82	16.66	19.88	23.40	27.14	31.04			
		P	30	5.95	6.40	6.80	7.18	7.53	7.88	8.24	8.63			
			40	7.15	7.66	8.13	8.57	8.99	9.41	9.84	10.31			
			50	8.63	9.20	9.73	10.25	10.74	11.23	11.72	12.25			
		LO	30	-15.40	-5.10	-0.30	2.70	5.60	8.80	12.60	16.70			
			40	-9.50	-0.40	4.20	7.20	10.20	13.60	17.50	21.80			
			50	-1.20	5.90	9.50	12.10	15.00	18.50	22.50	26.90			

Notes:
1. Q for capacity, P for power. Units in kW; LO for liquid out temperature in °C
2. All ZF*KQE values are rated at return gas temperature: 20°C and max subcooling
3. 20K Superheat

Performance data

TF7: 380 V, 3-Phase, 60 Hz ; **TFC** : 208-230 V, 3-Phase, 60 Hz ; **TFD** : 460 V, 3-Phase, 60 Hz

Vapor injection

R404A

Model			Cond. temp. °C	Evap. temp. °C										
				-40	-35	-30	-25	-20	-15	-10	-5	0	5	7
ZFI59KQE	TF7 TFC TFD	Q	30	13.38	15.84	19.06	22.95	27.40	32.36	37.72	43.40			
			40	12.71	15.10	18.18	21.88	26.09	30.74	35.73	40.97			
			50	11.81	14.16	17.12	20.65	24.64	28.97	33.64	38.46			
		P	30	7.41	7.96	8.46	8.93	9.37	9.80	10.25	10.74			
			40	8.90	9.53	10.11	10.66	11.19	11.71	12.25	12.83			
			50	10.74	11.45	12.11	12.75	13.36	13.95	14.59	15.25			
		LO	30	-15.40	-5.10	-0.30	2.70	5.60	8.80	12.60	16.70			
			40	-9.50	-0.30	4.20	7.20	10.20	13.60	17.50	21.80			
			50	-1.20	5.90	9.50	12.10	15.00	18.60	22.50	26.90			
ZFI68KQE	TF7 TFC TFD	Q	30	15.12	17.91	21.54	25.94	30.99						
			40	14.37	17.08	20.57	24.73	29.49						
			50	13.35	16.00	19.37	23.35	27.85						
		P	30	8.58	9.22	9.80	10.34	10.86						
			40	10.32	11.05	11.73	12.35	12.96						
			50	12.44	13.27	14.05	14.77	15.48						
		LO	30	-15.40	-5.10	-0.30	2.70	5.50						
			40	-9.60	-0.40	4.10	7.20	10.20						
			50	-1.20	5.90	9.40	12.10	15.00						
ZFI81KQE	TF7 TFC TFD	Q	30	17.37	20.58	24.75	29.80	35.61						
			40	16.52	19.63	23.63	28.41	33.88						
			50	15.33	18.39	22.26	26.82	32.00						
		P	30	10.23	10.99	11.69	12.33	12.94						
			40	12.30	13.17	13.98	14.73	15.45						
			50	14.83	15.82	16.74	17.61	18.45						
		LO	30	-15.40	-5.10	-0.30	2.70	5.50						
			40	-9.60	-0.40	4.10	7.20	10.20						
			50	-1.20	5.90	9.40	12.10	15.00						
ZFI96KQE	TF7 TFC TFD	Q	30	21.40	25.60	30.90	37.50	45.70	55.50	67.20	81.10			
			40	20.30	24.80	30.00	36.10	43.30	51.80	61.80	73.40			
			50	16.60	21.70	28.30	34.10	40.60	48.00	56.50	66.30			
		P	30	13.00	13.65	14.30	15.05	15.85	16.80	17.90	19.15			
			40	16.05	16.85	17.65	18.40	19.20	20.10	21.00	22.10			
			50	20.30	21.40	21.90	22.70	23.60	24.40	25.20	26.10			
		LO	30	-6.40	0.90	5.70	8.40	9.70	9.90	9.30	8.00			
			40	2.80	4.70	8.00	11.40	14.20	16.30	17.60	18.20			
			50	19.30	13.50	13.20	15.70	19.10	22.30	25.10	27.10			
ZFI122KQE	TE7 TEC TED	Q	30	27.01	32.29	38.98	47.31	57.54	69.93	84.71	102.13			
			40	25.63	31.29	37.84	45.51	54.57	65.26	77.84	92.54			
			50	20.92	27.41	35.62	42.97	51.17	60.50	71.18	83.48			
		P	30	15.86	16.63	17.45	18.34	19.34	20.48	21.81	23.35			
			40	19.58	20.55	21.49	22.44	23.43	24.49	25.65	26.96			
			50	24.75	26.13	26.66	27.71	28.72	29.72	30.76	31.87			
		LO	30	-6.40	0.90	5.70	8.40	9.70	9.90	9.30	8.00			
			40	2.80	4.70	8.00	11.40	14.20	16.30	17.60	18.20			
			50	19.30	13.50	13.20	15.70	19.10	22.30	25.10	27.00			
ZFI140KQE	TE7 TEC TED	Q	30	31.00	36.90	44.50	54.00	65.80	80.00	97.00	117.00			
			40	29.20	35.50	43.00	51.80	62.20	74.50	88.90	106.00			
			50	23.90	32.80	40.40	48.80	58.20	68.90	81.20	95.40			
		P	30	17.15	18.10	19.00	19.95	21.00	22.20	23.60	25.20			
			40	21.20	22.30	23.40	24.40	25.40	26.50	27.80	29.20			
			50	26.90	27.70	29.00	30.10	31.10	32.20	33.30	34.50			
		LO	30	-8.50	-0.50	4.40	7.20	8.40	8.40	7.70	6.40			
			40	1.80	4.20	7.50	10.70	13.40	15.30	16.50	16.90			
			50	18.40	13.10	12.90	15.20	18.40	21.60	24.20	26.10			

Notes:
1. Q for capacity, P for power. Units in kW; LO for liquid out temperature in °C
2. All ZF*KQE values are rated at return gas temperature: 20°C and max subcooling
3. 20K Superheat

Technical data

Compressor model				Liquid injection												
				ZF06KQE	ZF08KQE	ZF09KQE	ZF11KQE	ZF13KQE	ZF15KQE	ZF18KQE	ZF25KQE	ZF28KQE	ZF34KQE	ZF41KQE	ZF49KQE	ZF54KQE
Nominal horsepower			hp	2	2.5	3	3.5	4	5	6	7.5	9	10	13	15	17
Displacement	50 Hz	m³/hr		5.9	7.3	8.0	10.0	11.7	14.4	17.1	21.4	25.1	29.1	35.3	42.4	48.3
	60 Hz			7.1	8.8	9.7	12.1	14.1	17.4	20.6	25.8	30.3	35.1	42.6	51.2	58.3
Motor type	50 Hz			TFD	TFD	TFD	TFD	TFD	TFD	TFD	TFD	TFD	TFD	TFD	TFD	TFD
				TF5	TF5	TF5	TF5	TFC	TFC	TFC	TFC	TFC	TFC	TFC	TFC	TFC
	60 Hz			TFD	TFD	TFD	TFD	TFD	TFD	TFD	TFD	TFD	TFD	TFD	TFD	TFD
				TF5	TF5	TF5	TF5	TFC	TFC	TFC	TFC	TFC	TFC	TFC	TFC	TFC
				NA	NA	NA	NA	TF7	TF7	TF7	TF7	TF7	TF7	TF7	TF7	TF7
Locked rotor current (LRA)	50 Hz	TFD	Amps	26.0	32.0	40.0	46.0	51.5	64.0	74.0	102.0	121.4	100.0	118.0	139.0	168.0
		TFC/5		56.0	70.0	83.0	87.0	94.0	122.0	171.0	223.0	197.9	220.0	248.0	338.7	404.0
	60 Hz	TFD		27.0	31.0	39.0	44.0	49.5	75.0	75.0	99.0	121.4	100.0	125.0	139.0	185.0
		TFC/5		55.0	63.0	77.0	88.0	99.0	123.0	156.0	224.0	199.0	239.0	248.0	338.7	404.0
		TF7		NA	NA	NA	NA	57.0	64.0	70.0	119.6	106.6	145.0	145.0	220.0	220.0
Maximum operating current (MOC)	50 Hz	TFD	Amps	5.0	6.0	6.0	7.1	8.0	10.0	12.5	13.7	16.8	25.0	29.0	30.0	31.0
		TFC/5		10.0	12.0	13.0	14.5	16.0	22.0	25.0	28.8	38.7	51.4	57.7	67.9	31.0
	60 Hz	TFD		5.0	6.0	6.0	7.1	8.0	10.0	12.5	13.7	16.8	25.0	29.0	30.0	31.0
		TFC/5		10.0	12.0	13.0	14.5	16.0	22.0	25.0	28.8	38.7	51.4	57.7	67.9	31.0
		TF7		NA	NA	NA	NA	10.0	12.0	14.0	17.4	20.9	23.3	27.6	40.6	39.6
Maximum continuous current (MCC)	50 Hz	TFD	Amps	6.0	7.0	6.5	8.0	10.0	12.0	12.5	16.6	20.1	25.0	27.0	28.3	40.0
		TFC/5		13.0	13.5	13.5	16.5	18.5	23.5	28.5	36.3	42.6	52.0	59.0	71.0	82.2
	60 Hz	TFD		6.0	7.0	7.0	9.0	10.0	12.5	12.5	16.6	20.1	25.0	27.0	28.3	40.0
		TFC/5		13.0	13.5	13.5	17.0	18.5	26.5	30.5	37.4	42.6	52.0	59.0	71.0	82.2
		TF7		NA	NA	NA	NA	11.5	15.9	17.7	19.9	23.8	28.6	30.4	40.5	44.4
Rated load current (RLA=MCC/1.4)	50 Hz	TFD	Amps	4.3	5.0	4.6	5.7	7.1	8.6	8.9	11.9	14.4	17.9	19.3	20.2	28.6
		TFC/5		9.3	9.6	9.6	11.8	13.2	16.8	20.4	25.9	30.4	37.1	42.1	50.7	58.7
	60 Hz	TFD		4.3	5.0	5.0	6.4	7.1	8.9	8.9	11.9	14.4	17.9	19.3	20.2	28.6
		TFC/5		9.3	9.6	9.6	12.1	13.2	18.9	21.8	26.7	30.4	37.1	42.1	50.7	58.7
		TF7		NA	NA	NA	NA	8.2	11.4	12.6	14.2	17.0	20.4	21.7	28.9	31.7
Rated load current (RLA=MCC/1.56)	50 Hz	TFD	Amps	3.8	4.5	4.2	5.1	6.4	7.7	8.0	10.6	12.9	16.0	17.3	18.1	25.6
		TFC/5		8.3	8.7	8.7	10.6	11.9	15.1	18.3	23.3	27.3	33.3	37.8	45.5	52.7
	60 Hz	TFD		3.8	4.5	4.5	5.8	6.4	8.0	8.0	10.6	12.9	16.0	17.3	18.1	25.6
		TFC/5		8.3	8.7	8.7	10.9	11.9	17.0	19.6	24.0	27.3	33.3	37.8	45.5	52.7
		TF7		NA	NA	NA	NA	7.4	10.2	11.3	12.8	15.3	18.3	19.5	26.0	28.5
Winding resistance at 25˚C		TFD	Ohm	7.15	5.94	4.83	4.03	3.64	2.75	2.27	1.74	1.63	1.24	1.24	1.09	0.78
		TFC/5		1.79	1.46	1.23	1.00	0.91	0.69	0.56	0.39	0.37	0.31	0.28	0.22	0.18
		TF7		NA	NA	NA	NA	2.78	2.23	1.92	1.20	1.06	0.85	0.85	0.56	0.56
Connection size				Rotalock connection												
	Suction		in	1 1/4	1 1/4	1 1/4	1 1/4	1 1/4	1 1/4	1 1/4	1 1/4	1 1/4	1 3/4	1 3/4	1 3/4	1 3/4
	Discharge			1	1	1	1	1	1	1	1 1/4	1 1/4	1 1/4	1 1/4	1 1/4	1 1/4
	Injection			11/16	11/16	11/16	11/16	11/16	11/16	11/16	11/16	11/16	1	1	1	1
				Brazing connection												
	Suction		in	7/8	7/8	7/8	7/8	7/8	7/8	7/8	7/8	7/8	1 3/8	1 3/8	1 3/8	1 3/8
	Discharge			1/2	1/2	1/2	1/2	1/2	1/2	1/2	3/4	3/4	7/8	7/8	7/8	7/8
	Injection			11/16 (Rotalock only)									1 (Rotalock only)			
Outline dimension	Length		mm	246	246	246	246	246	246	246	246	246	280	280	280	280
	Width			246	246	246	246	257	257	257	257	257	280	280	280	280
	Height			369	391	391	405	442	442	442	442	451	534	534	552	552
Sight glass fitting thread			in	1 1/4"-12UNF				1 1/4"-12UNF					1 1/4"-12UNF			
Oil quantity			L	1.3	1.5	1.5	1.5	1.9	1.9	1.9	1.9	1.9	3.4	3.4	3.4	3.4
Net weight			kg	25	27	27	29	39	39	39	39	40	63	63	66	66
Terminal box IP grade				IP21				IP21 (Except ZF28KQE-TFC with IP54)					IP54			
Crankcase heater power			W	70				70					90			
Mounting parts Installation size (hole size)			mm	190 x 190 (Ø19)												

Technical data

Compressor model				Vapor injection												
				ZFI20KQE	ZFI23KQE	ZFI26KQE	ZFI36KQE	ZFI39KQE	ZFI50KQE	ZFI59KQE	ZFI68KQE	ZFI81KQE	ZFI96KQE	ZFI122KQE	ZFI140KQE	
Nominal horsepower			hp	4	5	6	8	10	12	15	18	20	25	30	40	
Displacement	50 Hz	m³/hr		11.7	14.4	17.1	21.4	25.1	29.1	35.3	42.4	48.3	60.7	77.3	87.5	
	60 Hz			14.1	17.4	20.6	25.8	30.3	35.1	42.6	51.2	58.3	73.3	93.3	105.5	
Motor type	50 Hz			TFD	TFD	TFD	TFD	TFD	TFD	TFD	TFD	TFD	TED	TED	TED	
				TFC	TFC	TFC	TFC	TFC	TFC	TFC	TFC	TFC	TEC	TEC	TEC	
	60 Hz			TFD	TFD	TFD	TFD	TFD	TFD	TFD	TFD	TFD	TED	TED	TED	
				TFC	TFC	TFC	TFC	TFC	TFC	TFC	TFC	TFC	TEC	TEC	TEC	
				TF7	TF7	TF7	TF7	TF7	TF7	TF7	TF7	TF7	TE7	TE7	TE7	
Locked rotor current (LRA)	50 Hz	TFD	Amps	64.0	74.0	74.0	102.0	121.4	100.0	118.0	139.0	168.0	246.5	310.0	310.0	
		TFC		135.0	163.4	172.0	223.0	197.9	220.0	248.0	338.7	404.0	599.0	599.0	599.0	
	60 Hz	TFD		62.0	75.0	70.0	99.0	121.4	100.0	125.0	139.0	185.0	272.4	310.0	310.0	
		TFC		123.0	170.9	156.0	224.0	199.0	239.0	248.0	338.7	404.0	599.0	599.0	599.0	
		TF7		64.0	94.3	70.0	119.6	106.6	145.0	145.0	220.0	220.0	317.3	358.0	358.0	
Maximum operating current (MOC)	50 Hz	TFD	Amps	9.0	12.4	13.7	16.0	18.1	25.0	29.0	30.0	31.0	41.5	53.6	56.3	
		TFC		18.0	23.6	26.0	36.7	37.2	51.4	57.7	67.9	31.0	81.4	101.6	112.6	
	60 Hz	TFD		9.0	12.4	13.7	16.0	18.1	25.0	29.0	30.0	31.0	41.5	53.6	56.3	
		TFC		18.0	26.5	26.0	36.7	37.2	51.4	57.7	67.9	31.0	81.4	101.6	112.6	
		TF7		12.2	15.2	16.3	18.9	20.5	23.3	27.6	40.6	39.6	49.0	61.2	64.3	
Maximum continuous current (MCC)	50 Hz	TFD	Amps	12.0	13.6	13.0	16.6	20.3	25.0	27.0	28.3	40.0	52.0	65.4	67.8	
		TFC		24.0	24.8	28.5	35.3	42.6	52.0	59.0	71.0	82.2	123.3	119.7	145.0	
	60 Hz	TFD		12.0	14.0	13.0	18.5	20.3	25.0	27.0	28.3	40.0	55.0	71.7	72.7	
		TFC		24.0	25.5	30.5	38.2	42.6	52.0	59.0	71.0	82.2	124.4	140.0	145.0	
		TF7		14.0	17.9	17.5	20.3	24.3	28.6	30.4	40.5	44.4	68.4	94.9	84.9	
Rated load current (RLA=MCC/1.4)	50 Hz	TFD	Amps	8.6	9.7	9.3	11.9	14.5	17.9	19.3	20.2	28.6	37.1	46.7	48.4	
		TFC		17.1	17.7	20.4	25.2	30.4	37.1	42.1	50.7	58.7	88.1	85.5	103.6	
	60 Hz	TFD		8.6	10.0	9.3	11.9	14.5	17.9	19.3	20.2	28.6	39.3	51.2	51.9	
		TFC		17.1	18.2	21.8	27.3	30.4	37.1	42.1	50.7	58.7	88.9	100.0	103.6	
		TF7		10.0	12.8	12.5	14.5	17.4	20.4	21.7	28.9	31.7	48.9	67.8	60.6	
Rated load current (RLA=MCC/1.56)	50 Hz	TFD	Amps	7.7	8.7	8.3	10.6	13.0	16.0	17.3	18.1	25.6	33.3	41.9	43.5	
		TFC		15.4	15.9	18.3	22.6	27.3	33.3	37.8	45.5	52.7	79.0	76.7	92.9	
	60 Hz	TFD		7.7	9.0	8.3	10.6	13.0	16.0	17.3	18.1	25.6	35.3	46.0	46.6	
		TFC		15.4	16.3	19.6	24.5	27.3	33.3	37.8	45.5	52.7	79.7	89.7	92.9	
		TF7		9.0	11.5	11.2	13.0	15.6	18.3	19.5	26.0	28.5	43.8	60.8	54.4	
Winding resistance at 25˚C		TFD	Ohm	2.75	2.27	2.27	1.74	1.63	1.24	1.24	1.09	0.78	0.58	0.36	0.36	
		TFC		0.69	0.50	0.56	0.39	0.37	0.31	0.28	0.22	0.18	0.09	0.09	0.09	
		TF7		2.23	1.64	1.92	1.20	1.06	0.85	0.85	0.56	0.56	0.42	0.25		
Connection size				Rotalock connection												
	Suction		in	1 1/4	1 1/4	1 1/4	1 1/4	1 1/4	1 3/4	1 3/4	1 3/4	1 3/4	2 1/4	2 1/4	2 1/4	
	Discharge			1	1	1	1 1/4	1 1/4	1 1/4	1 1/4	1 1/4	1 1/4	1 3/4	1 3/4	1 3/4	
	Injection			1	1	1	1	1	1	1	1	1	1	1	1	
				Brazing connection												
	Suction		in	7/8	7/8	7/8	7/8	7/8	1 3/8	1 3/8	1 3/8	1 3/8	1 5/8	1 5/8	1 5/8	
	Discharge			1/2	1/2	1/2	3/4	3/4	7/8	7/8	7/8	7/8	1 3/8	1 3/8	1 3/8'	
	Injection			1/2	1/2	1/2	1/2	1/2	5/8	5/8	5/8	5/8	3/4	3/4	3/4	
Outline dimension	Length		mm	246	246	246	246	246	328	328	328	328	448	448	448	
	Width			257	257	257	257	257	297	297	297	297	409.3	409.3	409.3	
	Height			442	442	442	442	451	534	534	552	552	715	715	715	
Sight glass fitting thread			in	1 1/4"-12UNF									1 3/4" x 12UNF			
Oil quantity			L	1.9	1.9	1.9	1.9	1.9	3.4	3.4	3.4	3.4	6.3	6.3	6.3	
Net weight			kg	39	39	39	39	40	63	63	66	66	176.9	179.2	179.2	
Terminal box IP grade				IP21 (Except ZFI39KQE-TFC with IP54)					IP54				IP56			
Crankcase heater power			W	70					90				150			
Mounting parts Installation size (hole size)			mm	190 x 190 (Ø19)									266.7 x 266.7 (Ø22.6)			

EVI CoreSense control kits and wiring diagram

New Option:
Smart Control Module

EVI CoreSense control kits

Introduction

The EVI CoreSense control kit of ZFI compressor is intended to control vapor injection, maintain a safe discharge temperature, and provide intelligent diagnosis and protection.

The kit includes a printed circuit board (PCB), an electronic expansion valve (EXV), and three sensors, as well as containing a transformer and an EXV filter. All parts are common, except the EXV valve orifice size, which will be applied to different ZFI models.

In vapor injection application, the valve is driven by sensors mounted near the heat exchanger and attempts to maintain the vapor outlet sensor 5K higher than the vapor inlet. The system will switch to discharge line temperature control if vapor injection is insufficient to maintain a safe discharge temperature. If the discharge temperature becomes dangerously high, the system will stop the compressor, turn on an LED alarm, and trigger a voltage free alarm relay contact. The compressor can auto-reset, but not lockout.

Emerson provides customer EVI CoreSense control kits with and without CoreSense box.

EVI CoreSense control kits			
Part number without CoreSense box	Part number with CoreSense box	Apply for ZFI models	EXV valve orifice size (Identification code)
562-0313-00	562-0291-01	ZFI20~ZFI26	Ø1.3mm (TS1**13**C03)
562-0313-01	562-0291-02	ZFI36~ZFI59	Ø1.65mm (TS1**16**C03)
562-0313-02	562-0291-03	ZFI68~ZFI81	Ø1.8mm (TS1**18**C03)
562-0313-03	562-0291-06	ZFI96-ZFI140	Ø2.4mm (TS1**24**C03)

Printed circuit board

Wear a ground strap when working with the PCB to avoid the risk of damage from static discharges.

General PCB layout, input and output ports are shown in the image below, the ports to EXV, DLT, as well as the vapor in and vapor out sensors are done with Poka-yoke connector design. Connect sensors, EXV, and system wiring as shown in wiring diagram.

The PCB is supplied power through a transformer with a power input of 50/60 Hz, 220VAC, and an output of 12VAC to the PCB board.

For EVI control kits with CoreSense box, the board and transformer are both mounted in the box, using 4 x Ø5mm holes at 61 x 101mm centers, fastened by screws. Spare part number is 543-0189-01 for field service.

For EVI control kits without CoreSense box, we provide individual parts for compact system design. The board is with 4 x Ø4mm holes at 61 x 101mm centers, please use plastic stakes provided. Spare part number is 543-0219-01 for field service.

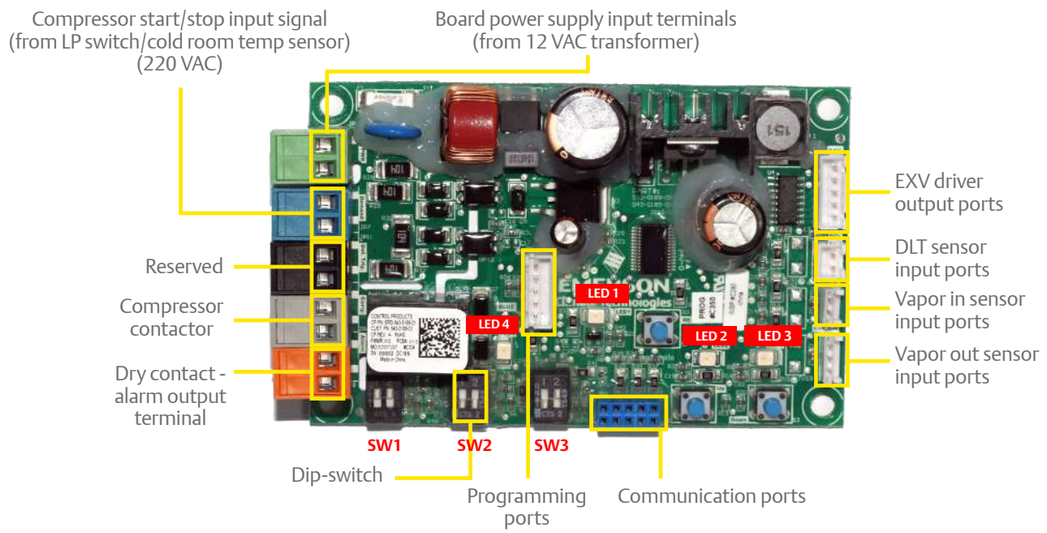

Dip-switch setting

The dip-switch default setting has been done in-factory, please do not change setting and ensure that the replacement board is set correctly.

For the glide-refrigerants application like R407A, R407F, R407C, we would recommend 10K superheat. Please contact your local Emerson sales and application engineer to reset the dip-switch.

Dip-switch default factory setting			
	SW1	SW2	SW3
BIT1	ON	OFF	OFF
BIT2	ON	OFF	ON
Dip-switch Setting position	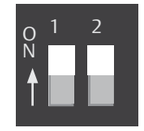	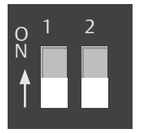	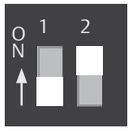
Function description of default setting	1. Discharge Line Temperature (DLT) control target ≤110°C 2. Vapor out superheat target is 5K 3. Compressor will shut down If DLT above 125°C 4. Compressor can auto-reset and no lockout due to DLT overheat protection 5. Compressor minimum stop time is 0 minute 6. Vapor injection mode		

LED functions

LED1 (yellow-green)

LED1 will light up during initialization after power on, after that, blinking lights will indicate the sensor status.

LED	Color	Compressor or sensor status	LED1 behavior
LED1	Yellow-Green	Idle compressor waiting to start	Blinks at 1 Hz
		DLT overheat protection	Blinks 2 times at 1 Hz, waiting 5s, then repeat...
		DLT failure	Blinks 3 times at 1 Hz, waiting 5s, then repeat...
		Vapor in sensor failure	Blinks 4 times at 1 Hz, waiting 5s, then repeat...
		Vapor out sensor failure	Blinks 5 times at 1 Hz, waiting 5s, then repeat...

LED2, LED3 (yellow-green)

LED2 and **LED3** will blink once when entering or exiting EXV manual operation, and also indicate EXV opening and closing.

LED	Color	EXV status	LED2, LED3 behavior
LED2 LED3	Yellow-Green	Opening	LED2 is flashing at 1 Hz, LED3 off
		Closing	LED3 is flashing at 1 Hz, LED2 off
		Fully open	LED2 constant on, LED3 off
		Fully closed	LED3 constant on, LED2 off

LED4 (red color) alarm

LED4 will turn on when alarm is triggered by the following items

LED	Color	Sensor status	LED4 behavior
LED4	Red	DLT overheat protection	LED4 on, red color
		DLT sensor failure	LED4 on, red color
		Vapor in sensor failure	LED4 on, red color
		Vapor out sensor failure	LED4 on, red color

Temperature sensors

The EVI kits include 3 temperature sensors. Please ensure all sensors are mounted in the correct locations, fastened, and insulated properly.

The discharge temperature sensor should be installed approximately 178mm (7 inches) from discharge tube outlet. If a service valve is installed at the discharge tube, the sensor should be located 127mm (5 inches) from the valve braze.

The vapor-in sensor is connected to the pipe between the EXV and PHE. The vapor-out sensor is connected to the pipe from the PHE to the compressor vapor injection port. Don't make the vapor-in and vapor-out sensor location reversed.

Sensor	Wire length	Resistance value vs. temperature	Open	Short
Discharge temperature sensor	1800mm or 4500mm	351.6 kΩ @0°C 100.0 kΩ @25°C 5.8 kΩ @100°C	>1000kΩ	<400Ω
Vapor-in sensor	1800mm or 4500mm	28.1 kΩ @0°C 10.0 kΩ @25°C 0.9 kΩ @100°C	>500kΩ	<500Ω
Vapor-out sensor	1800mm or 4500mm	28.1 kΩ @0°C 10.0 kΩ @25°C 0.9 kΩ @100°C	>500kΩ	<500Ω

Electronic expansion valve (EXV)

The EXV contains an EXV-valve and EXV-coil, lead wire length for coil is 1796mm (4500mm optional), the valve size includes Ø1.3mm, Ø1.65mm and Ø2.4mm depending on system size, applied to different ZFI models.

The liquid refrigerant should pass from the bending tube and flow out from the straight tube. Please weld the filter before the EXV provided along with the kits.

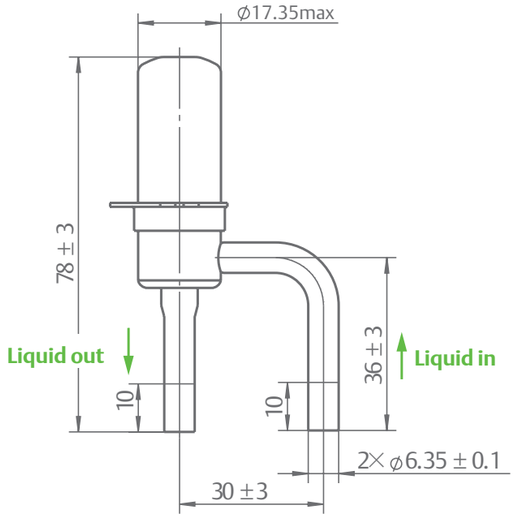

EXV valve connection size, mm

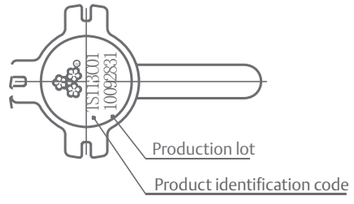

Product identification code specific

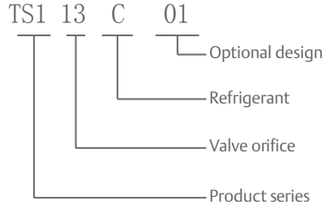

EXV valve identification code

ZFI standard control box wiring example

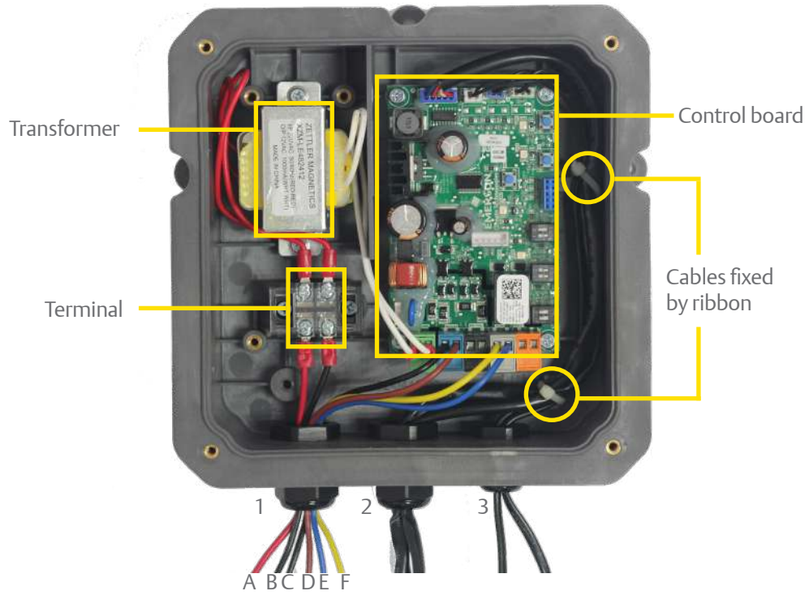

Waterproof gland no.	Gland 1	Gland 2	Gland 3
Wire function	A (red) and B (black): Controller power supply input (220–240 VAC 50/60 Hz)	EXV Coil DLT Sensor	Vapor-in sensor Vapor-out sensor
	C (black) and D (brown): Compressor start/stop input (220–240 VAC 50/60 Hz)		
	E (blue) and F (yellow): Compressors contactor coil Control output		
Wire connection	Wires A and B: Connect to terminal	Connect to the EXV, DLT sensor at the top edge of the control board	Connect to the vapor-in/out port at the top edge of the control board
	Wires C and D: Connect to the blue connector on the control board		
	Wires E and F: Connect to the gray connector on the control board		
Gland internal diameter range	2–3 mm		
Jacket line requirement	Internal wire size: 18 AWG		
	Rated voltage: 300 V/600 V		
	Rated temperature: 80/105 °C		
	Recommended: UL105, UL1011, UL1007		

Plate heat exchanger (PHE) and liquid line temperature

Mount plate heat exchanger in the vertical position and oriented correctly. Ensure that sensors are located correctly as well.

ZFI vapor injection compressors can deliver very cold liquid with economizer cycle. The sub-cooling of liquid line calls for these recommendations:

1. Liquid line pipe connecting the economizer to the evaporator expansion valve should be well-insulated separately.
2. The lower liquid line temperature can increase the evaporator valve capacities. Please follow the valve manufacturer's recommended liquid temperature correction factors for proper selection of evaporator expansion valve. Refer to product catalogue or select software for liquid line temperature.

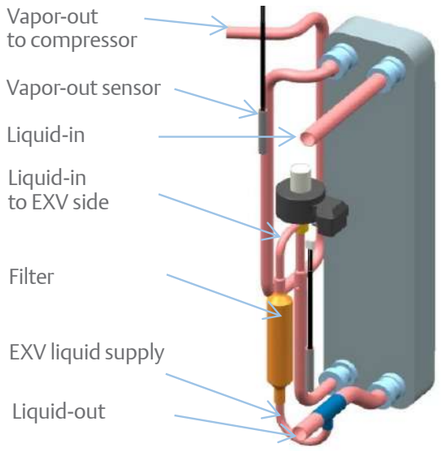

Example of PHE assembly with downstream liquid supply

PHE piping size and flow direction

F1: Vapor Outlet

F2: Liquid Inlet

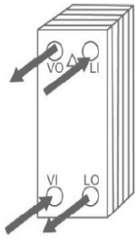

F3: Vapor Inlet

F4: Liquid Outlet

Compressor Model	Part Number	PHE Model	F1	F3	F2	F4
			Vapor Outlet	Vapor Inlet	Liquid Inlet	Liquid Outlet
ZFI 20,23,26,36,39KQE	067-0035-00	B8TH X 14	9.52	9.52	12.7	12.7
ZFI 50, 59, 68KQE	067-0036-00	B8TH X 20	9.52	9.52	19.05	19.05
ZFI81KQE	067-0070-00	B8TH X 24	9.52	9.52	19.05	19.05
ZFI96, 122, 140KQE	067-0067-00	B10TH X 40	19.05	19.05	19.05	19.05

Unit: mm

Wiring diagram

ZFI 20 - ZFI81

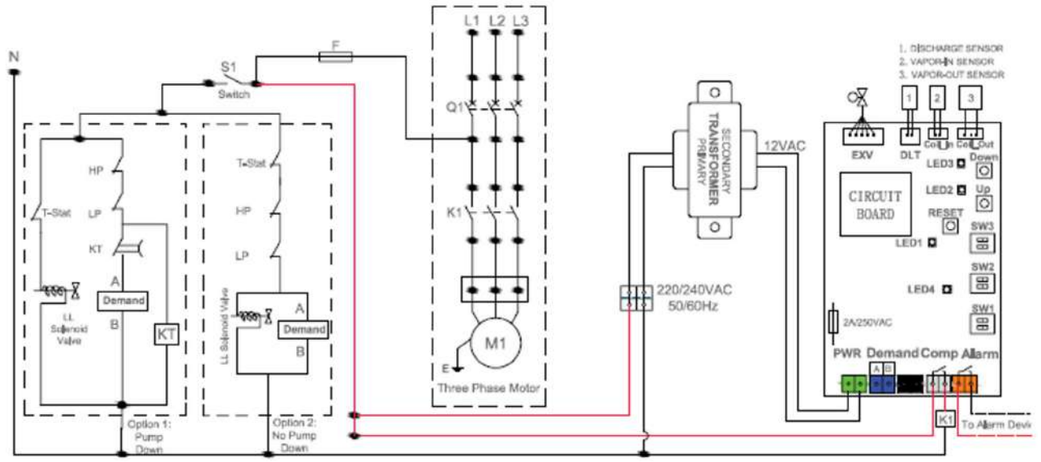

ZF96-ZF1140

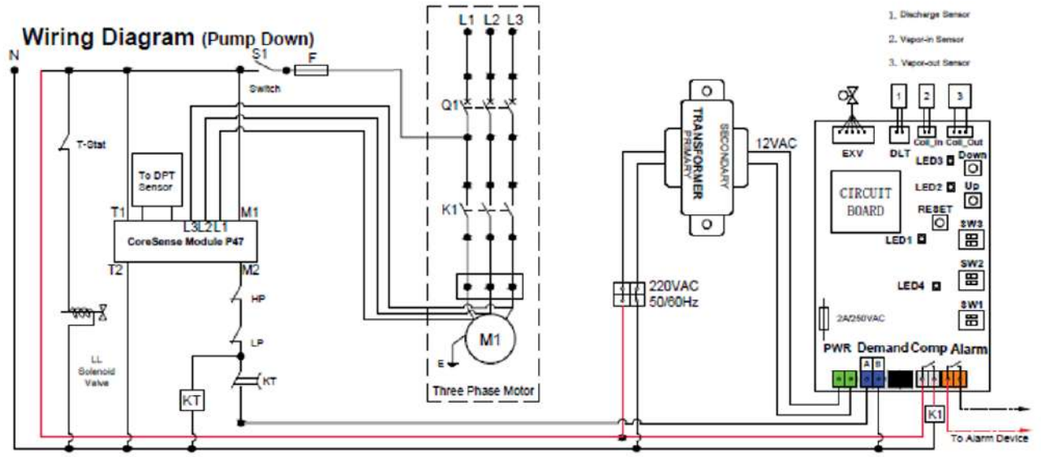

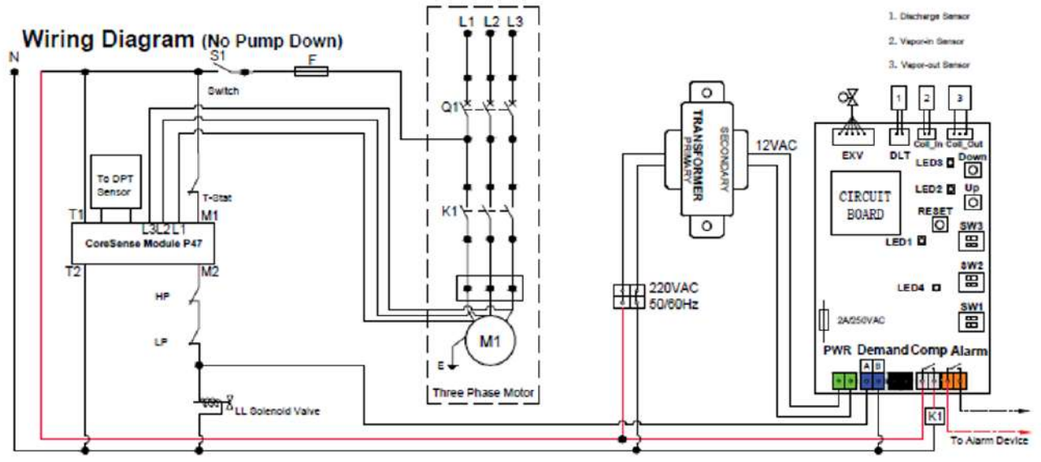

Notes: K1- Contactor Q1 - Breaker KT - Time Delay Relay Demand - On/Off Signal

Dimensional drawings

ZF06KQE - ZF11KQE (BOM 551)
Rotalock connection

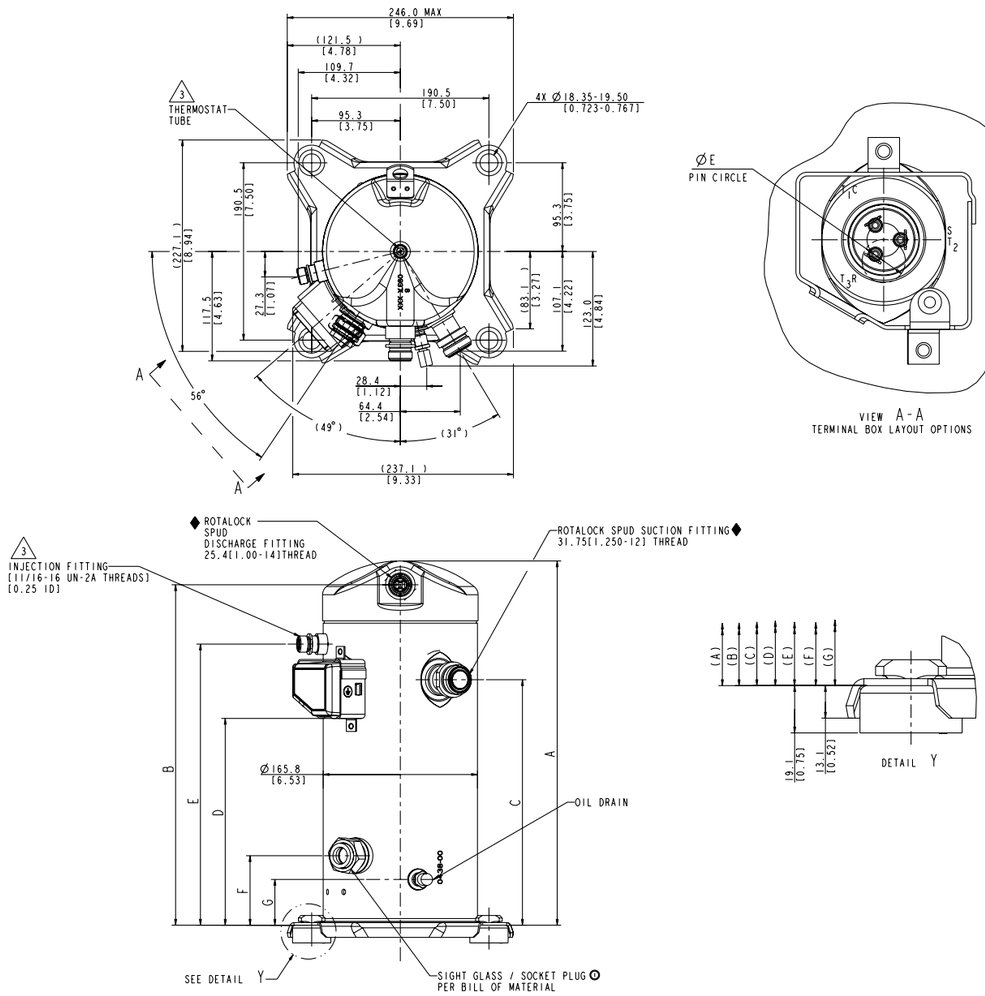

Model number	mm[in]						
	A±3.0	B	C	D±3.0	E	F	G
ZF06KQE	368.7 [14.52]	343.1 [13.51]	243.8 [9.60]	202.2 [7.96]	279.4 [11.00]	68.9 [2.71]	43.4 [1.70]
ZF08KQE	391.3 [15.41]	365.7 [14.40]	263.7 [10.38]	222.1 [8.74]	302.0 [11.88]	74.6 [2.93]	49.1 [1.93]
ZF09KQE	391.3 [15.41]	365.7 [14.40]	263.7 [10.38]	222.1 [8.74]	302.0 [11.88]	74.6 [2.93]	49.1 [1.93]
ZF11KQE	405.0 [15.94]	379.4 [14.94]	276.4 [10.88]	234.8 [9.24]	315.7 [12.42]	74.6 [2.93]	49.1 [1.93]

Notes:
(1) All tolerances ± 1.5mm [0.06in] unless otherwise specified
(2) Due to accumulated assembly tolerances, the listed components may vary from the mounting holes. All fittings: ± 3.0mm [0.12in]
(3) Tube ends must be plugged
(4) All units are in mm[inch]

Dimensional drawings

ZF13KQE - ZF28KQE (BOM 551)
Rotalock connection

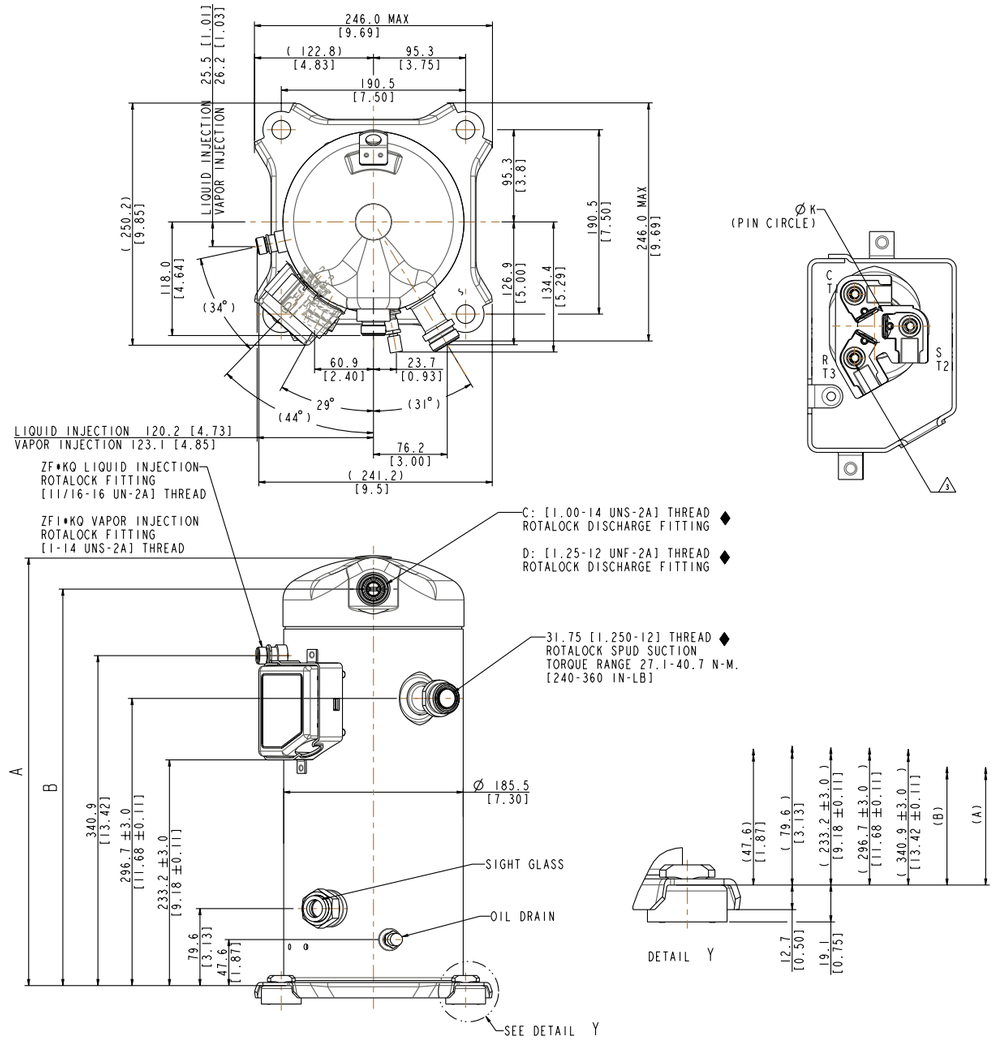

Model number	mm (in)		Discharge fitting
	A±3.0	B±3.0	
ZF13KQE	442.0 [17.40]	409.6 [16.13]	C
ZF15KQE			
ZF18KQE			
ZF25KQE			D
ZF28KQE	451.0 [17.76]	418.6 [16.48]	D

Notes:
(1) All tolerances ± 1.5mm [0.06in] unless otherwise specified
(2) Due to accumulated assembly tolerances, the listed components may vary from the mounting holes. All fittings: ± 3.0mm [0.12in]
(3) Tube ends must be plugged
(4) All units are in mm[inch]

Dimensional drawings

ZFI20KQE - ZFI39KQE (BOM 552)

Rotalock connection

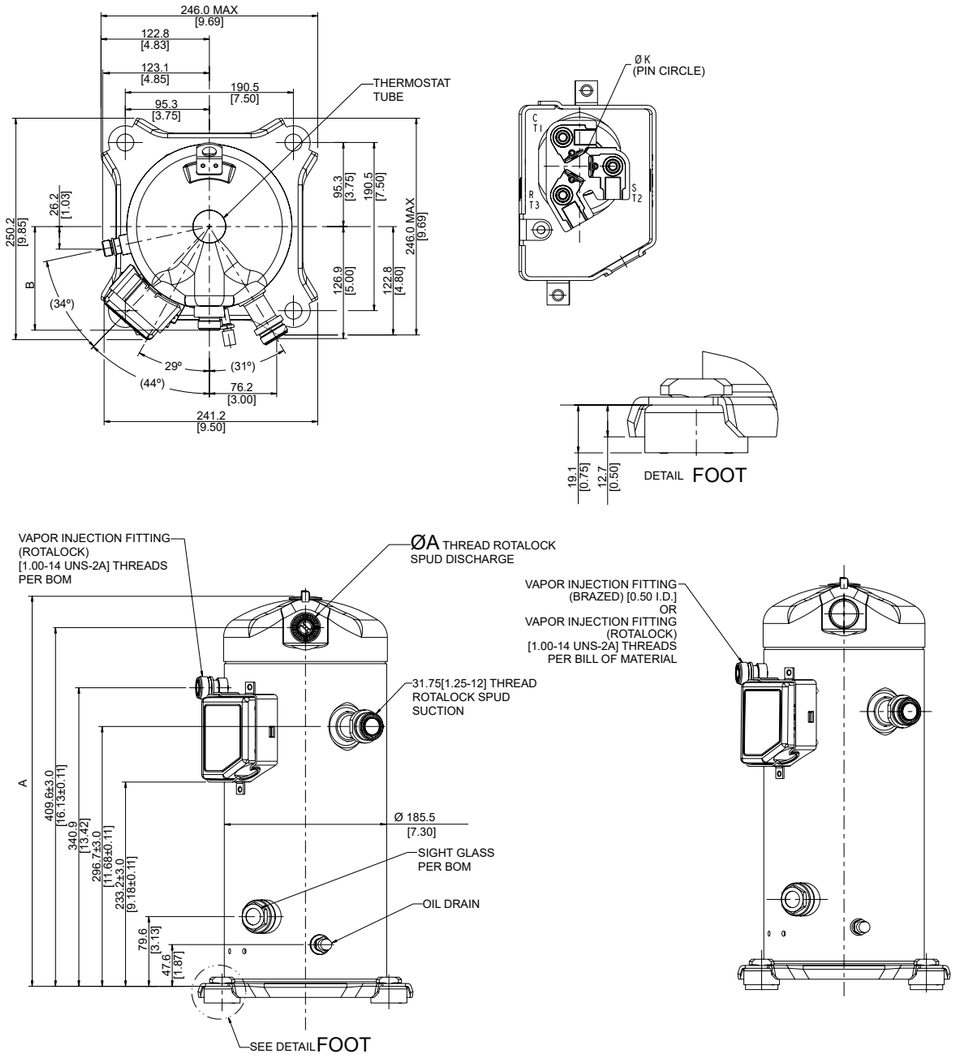

Model number	mm (in)		Discharge fitting
	A±3.0	B	
ZFI20KQE	442.0 [17.40]	409.6 [16.13]	C
ZFI23KQE			
ZFI26KQE			
ZFI36KQE			D
ZFI39KQE	451.0 [17.76]	418.6 [16.48]	D

Notes:
(1) All tolerances ± 1.5mm [0.06in] unless otherwise specified
(2) Due to accumulated assembly tolerances, the listed components may vary from the mounting holes. All fittings: ± 3.0mm [0.12in]
(3) Tube ends must be plugged
(4) All units are in mm[inch]

Dimensional drawings

ZF34KQE - ZF54KQE (BOM 564/567)

Rotalock connection

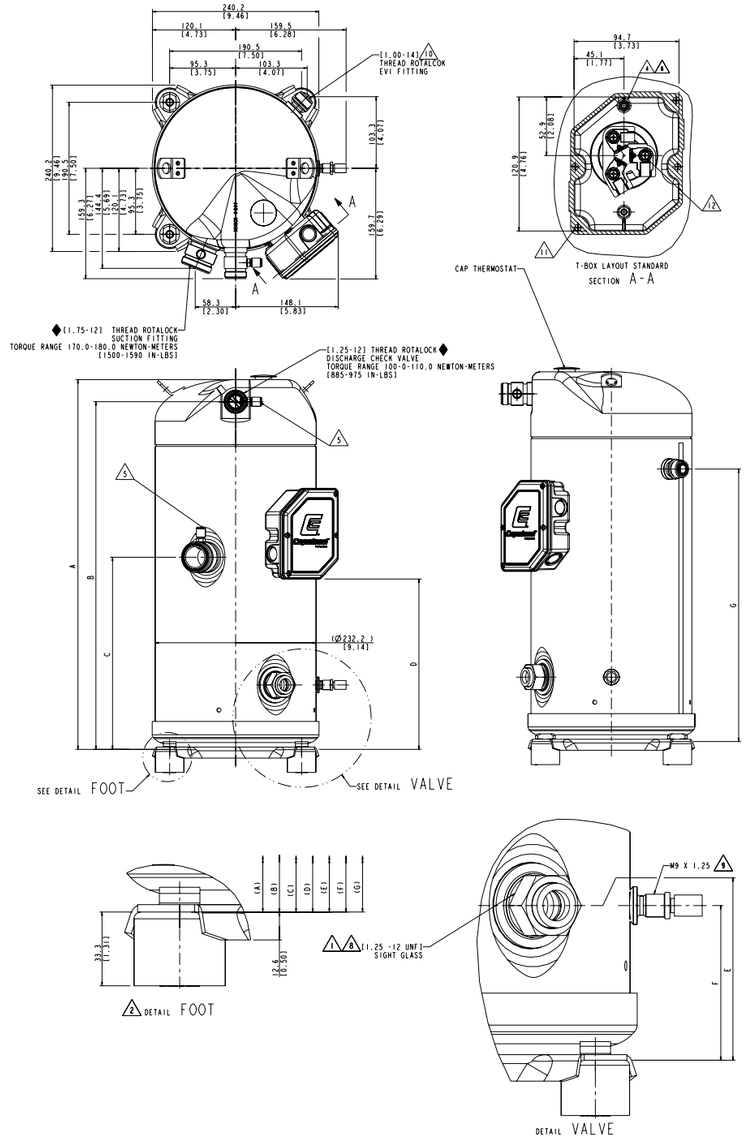

Model number	mm (in)						
	A	B	C	D	E	F	G
ZF34KQE	533.6 [21.0]	501.8 [19.75]	277.3 [10.91]	245.7 [9.67]	93.0 [3.66]	93.0 [3.66]	393.3 [15.49]
ZF41KQE							
ZF49KQE	551.5 [21.7]	519.5 [20.45]	295.0 [11.61]	263.6 [10.37]	92.6 [3.64]	92.6 [3.64]	441.0 [16.18]
ZF54KQE							

Notes:
(1) All tolerances ± 1.5mm [0.06in] unless otherwise specified
(2) Due to accumulated assembly tolerances, the listed components may vary from the mounting holes. All fittings: ± 3.0mm [0.12in]
(3) Tube ends must be plugged
(4) All units are in mm[inch]

Dimensional drawings

ZFI50KQE - ZFI81KQE (BOM 564/567)

Rotalock connection

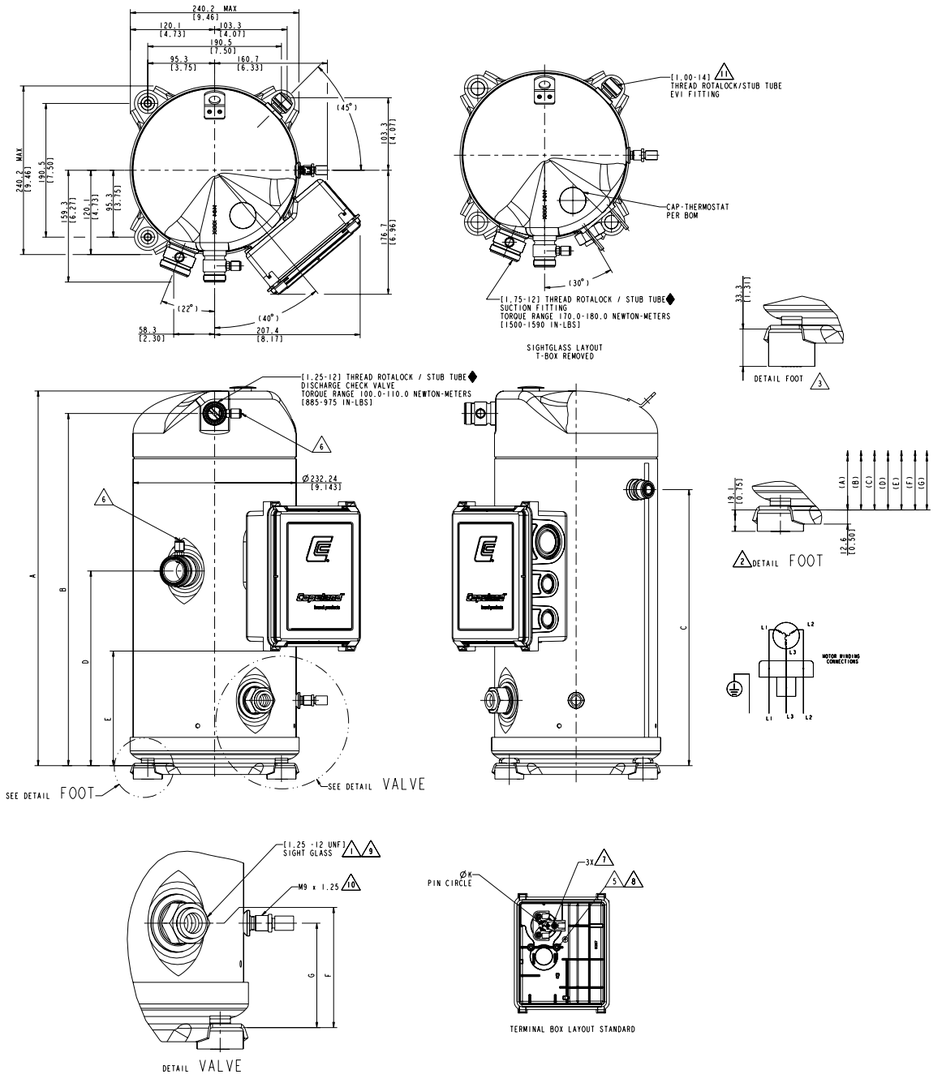

Model number	mm (in)							ØK
	A	B	C	D	E	F	G	
ZFI50KQE	533.6 [21.01]	501.8 [19.76]	393.3 [15.48]	277.3 [10.92]	163.3 [6.43]	93.0 [3.66]	93.0 [3.66]	17.45 [0.687]
ZFI59KQE								
ZFI68KQE	551.5 [21.71]	519.5 [20.45]	411.0 [16.18]	295.0 [11.61]	163.3 [6.43]	92.6 [3.64]	92.6 [3.64]	20.70 [0.815]
ZFI81KQE								

Notes:
(1) All tolerances ± 1.5mm [0.06in] unless otherwise specified
(2) Due to accumulated assembly tolerances, the listed components may vary from the mounting holes. All fittings: ± 3.0mm [0.12in]
(3) Tube ends must be plugged
(4) All units are in mm[inch]

Dimensional drawings

ZF06KQE - ZF11KQE (BOM 550)

Stub tube connection

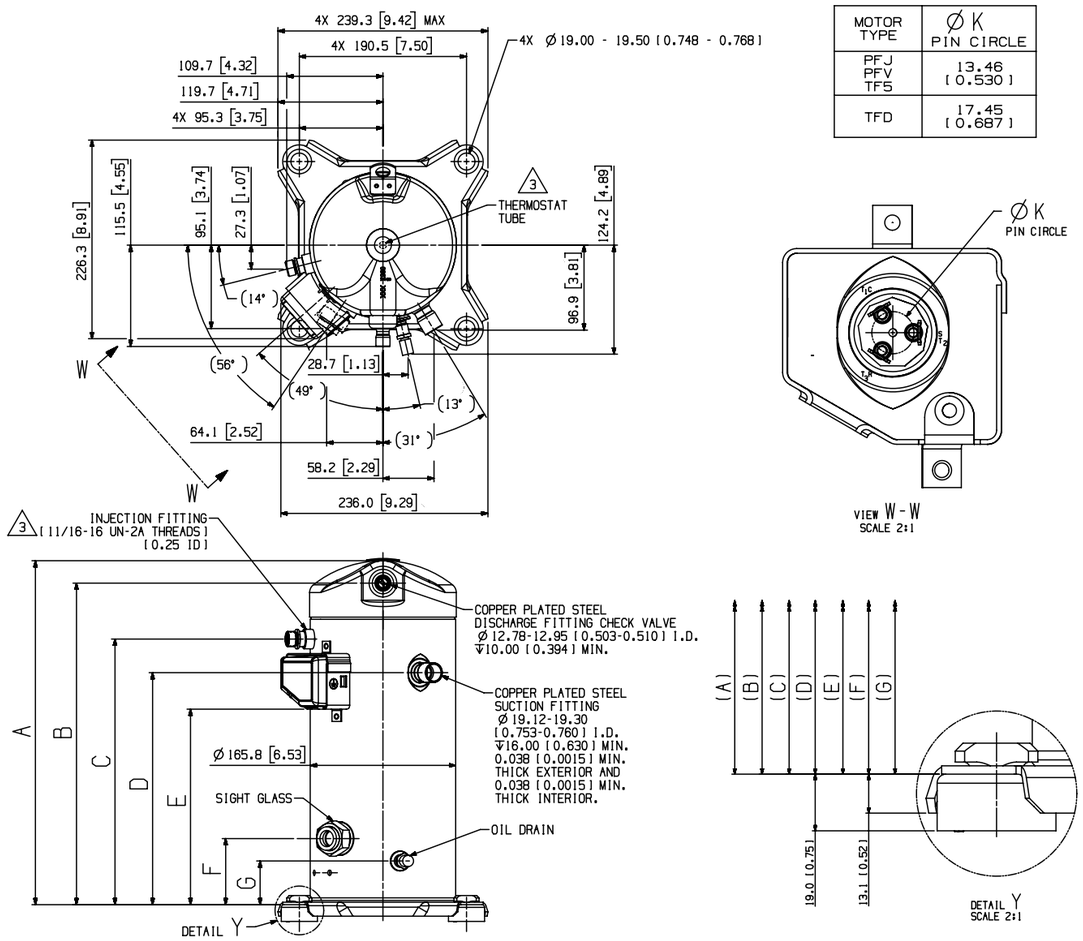

Model number	mm (in)						
	A	B	C	D	E	F	G
ZF06KQE	369.9 [14.56]	343.8 [13.54]	280.0 [11.02]	244.5 [9.62]	202.9 [7.99]	69.6 [2.74]	44.1 [1.74]
ZF08KQE ZF09KQE	392.5 [15.45]	366.4 [14.42]	302.6 [11.91]	264.4 [10.41]	222.8 [8.77]	75.3 [2.96]	49.8 [1.96]
ZF11KQE	406.3 [16.00]	380.1 [14.96]	316.4 [12.46]	277.1 [10.91]	235.5 [9.27]	75.3 [2.96]	49.8 [1.96]

Notes:
(1) All tolerances ± 1.5mm [0.06in] unless otherwise specified
(2) Due to accumulated assembly tolerances, the listed components may vary from the mounting holes. All fittings: ± 3.0mm [0.12in]
(3) Tube ends must be plugged
(4) All units are in mm[inch]

Dimensional drawings

ZF13KQE – ZF28KQE (BOM 550)
Stub tube connection

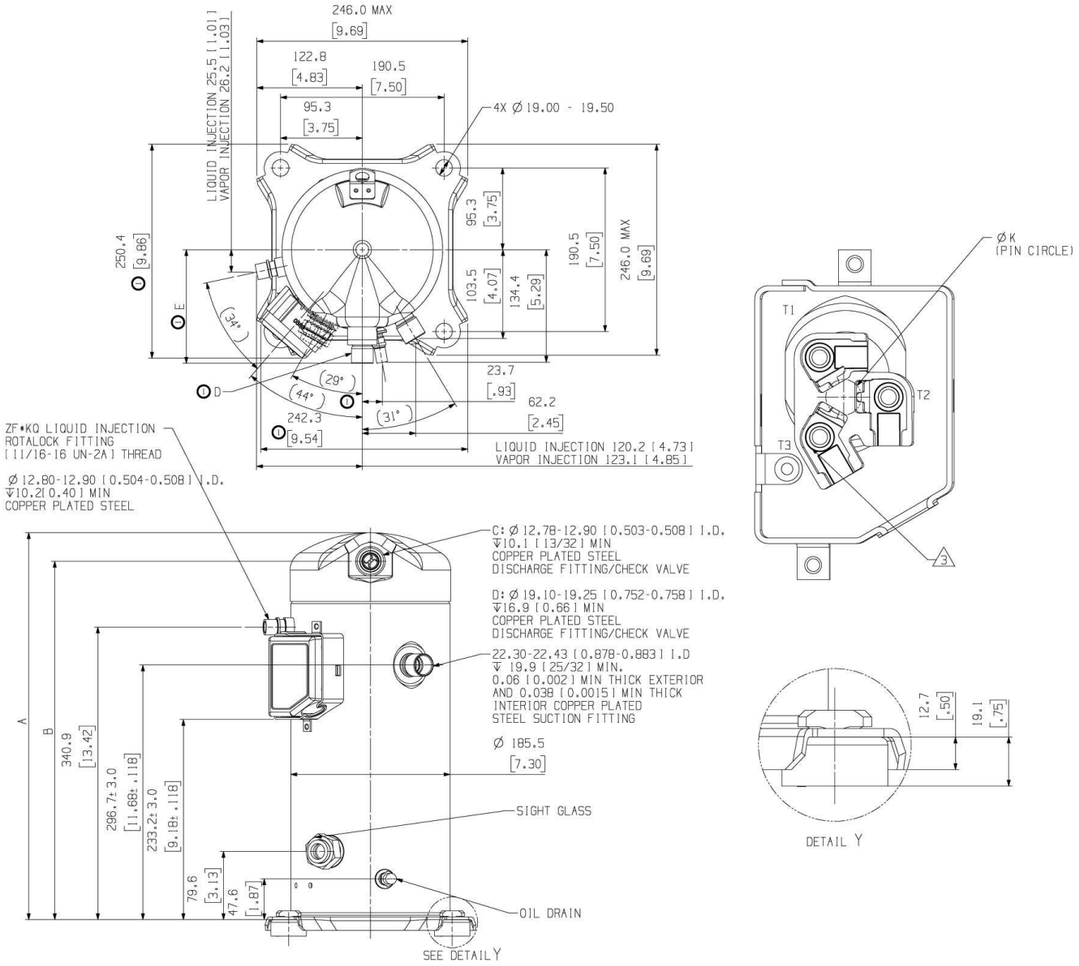

Model number	mm (in)		Discharge fitting
	A±3.0	B±3.0	
ZF13KQE	442.0 [17.40]	409.6 [16.13]	C
ZF15KQE			
ZF18KQE			
ZF25KQE			D
ZF28KQE	451.0 [17.76]	418.6 [16.48]	D

Notes:
(1) All tolerances ± 1.5mm [0.06in] unless otherwise specified
(2) Due to accumulated assembly tolerances, the listed components may vary from the mounting holes. All fittings: ± 3.0mm [0.12in]
(3) Tube ends must be plugged
(4) All units are in mm[inch]

Dimensional drawings

ZF28KQE-TFC and ZFI39KQE-TFC (BOM 580)
Stub tube connection

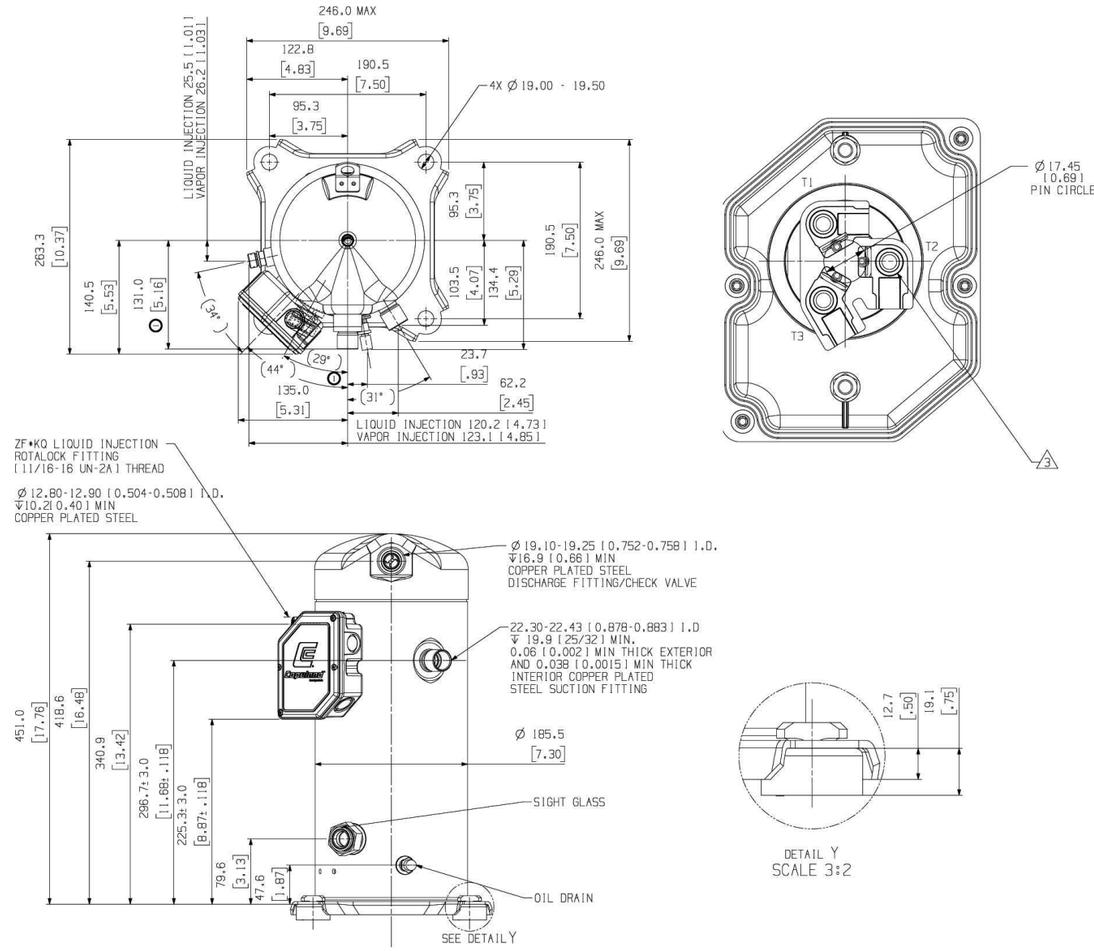

Notes:
(1) All tolerances ± 1.5mm [0.06in] unless otherwise specified
(2) Due to accumulated assembly tolerances, the listed components may vary from the mounting holes. All fittings: ± 3.0mm [0.12in]
(3) Tube ends must be plugged
(4) All units are in mm[inch]

Dimensional drawings

ZFI20KQE – ZFI39KQE (BOM 550)
Stub tube connection

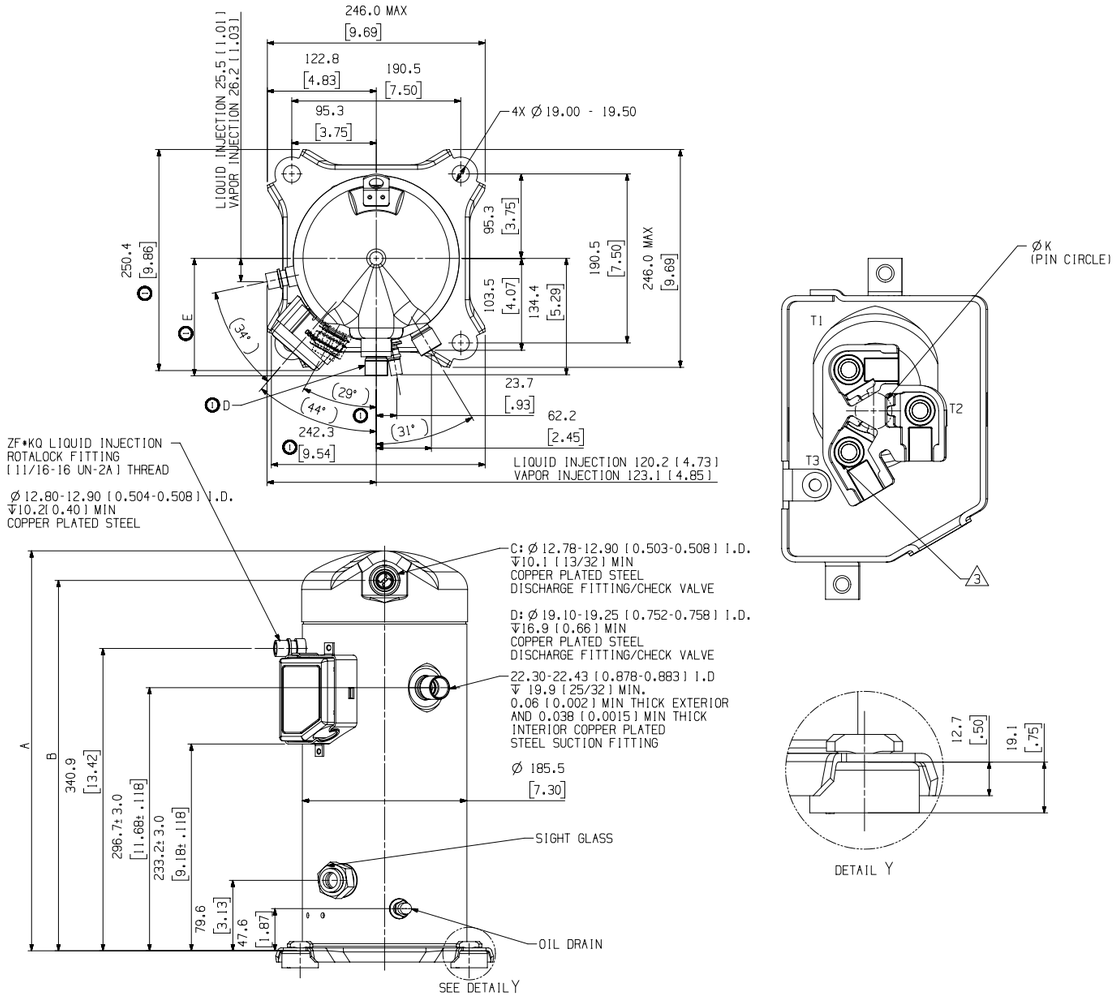

Model number	mm (in)		Discharge fitting
	A±3.0	B	
ZFI20KQE	442.0 [17.40]	409.6 [16.13]	C
ZFI23KQE			
ZFI26KQE			
ZFI36KQE			D
ZFI39KQE	451.0 [17.76]	418.6 [16.48]	D

Notes:
(1) All tolerances ± 1.5mm [0.06in] unless otherwise specified
(2) Due to accumulated assembly tolerances, the listed components may vary from the mounting holes. All fittings: ± 3.0mm [0.12in]
(3) Tube ends must be plugged
(4) All units are in mm[inch]

Dimensional drawings

ZF34KQE – ZF41KQE (BOM 554)
Stub tube connection

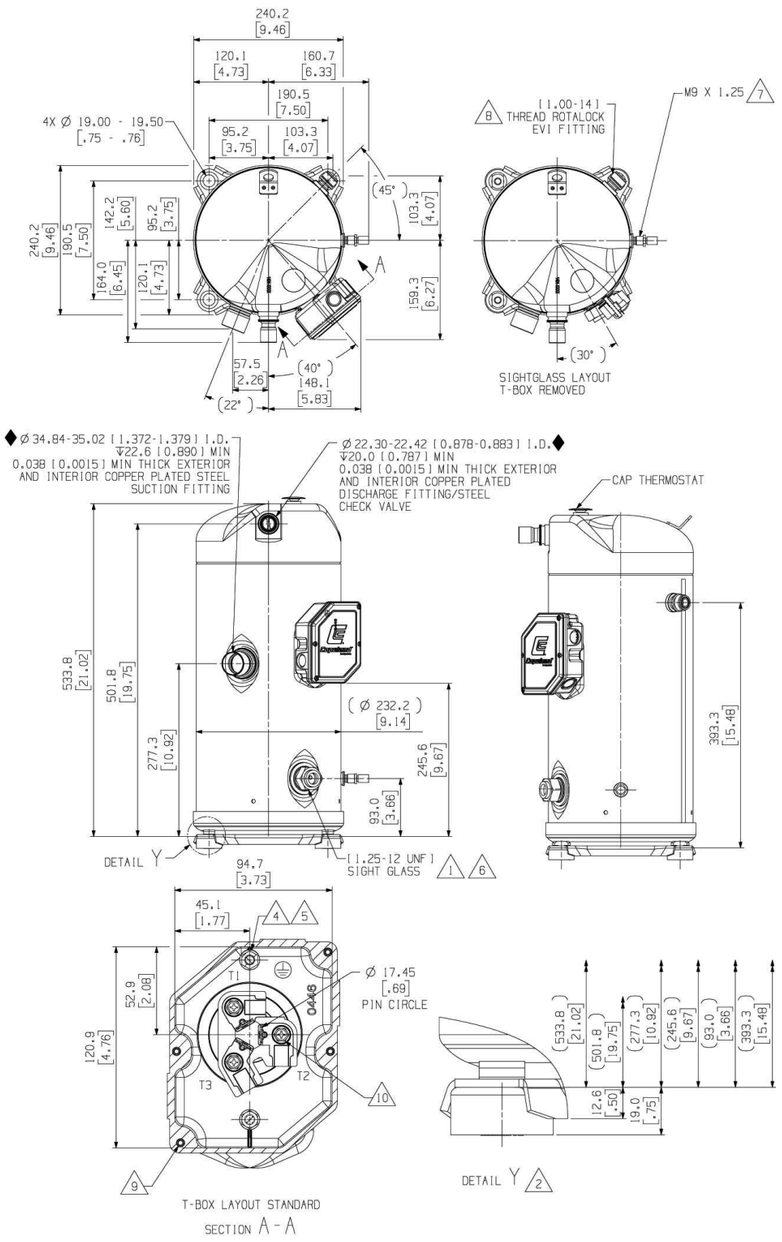

Notes:
(1) All tolerances ± 1.5mm [0.06in] unless otherwise specified
(2) Due to accumulated assembly tolerances, the listed components may vary from the mounting holes. All fittings: ± 3.0mm [0.12in]
(3) Tube ends must be plugged
(4) All units are in mm[inch]

Dimensional drawings

ZF49/54KQE-TFD/TF7 (BOM 554)
Stub tube connection

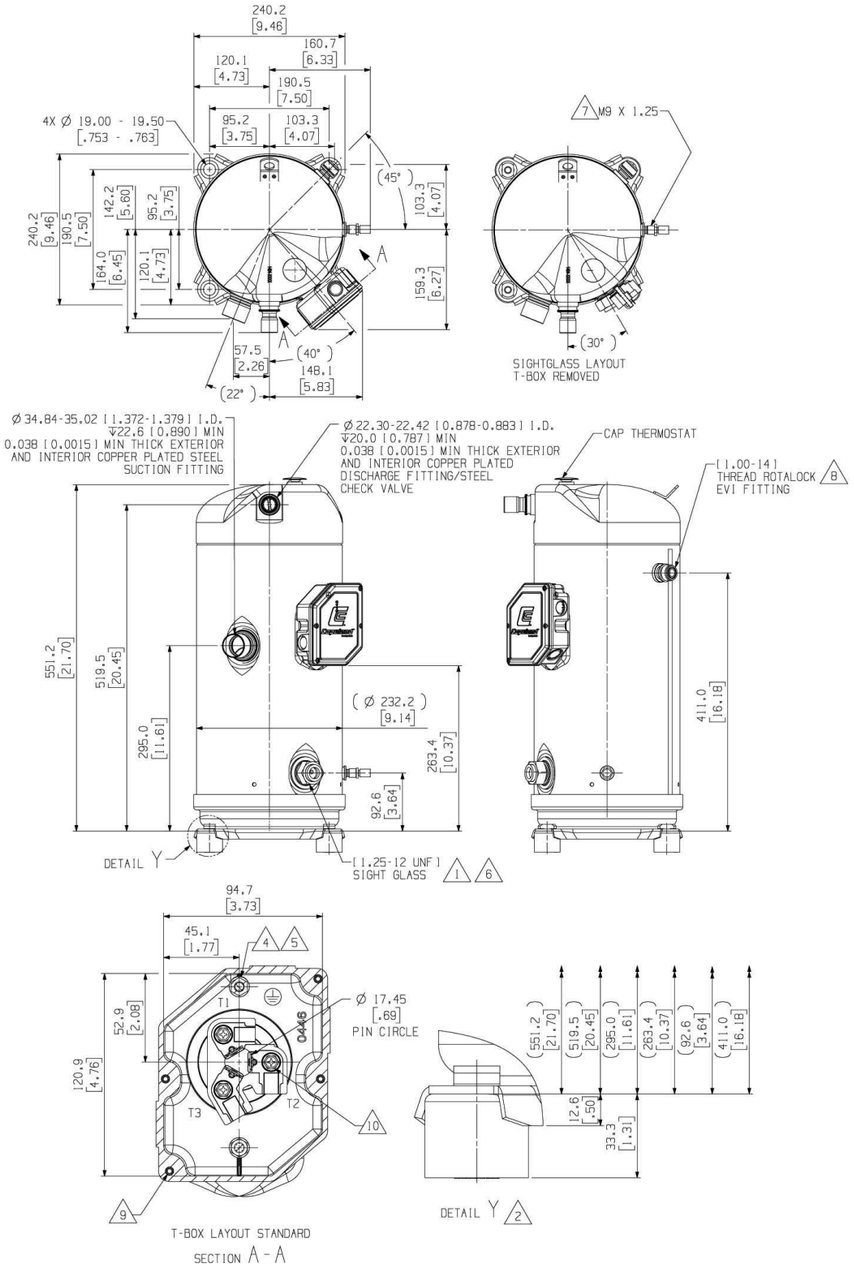

Notes:
(1) All tolerances ± 1.5mm [0.06in] unless otherwise specified
(2) Due to accumulated assembly tolerances, the listed components may vary from the mounting holes. All fittings: ± 3.0mm [0.12in]
(3) Tube ends must be plugged
(4) All units are in mm[inch]

Dimensional drawings

ZF49/54KQE-TFC and ZFI68/81KQE-TFC (BOM 554)
Stub tube connection

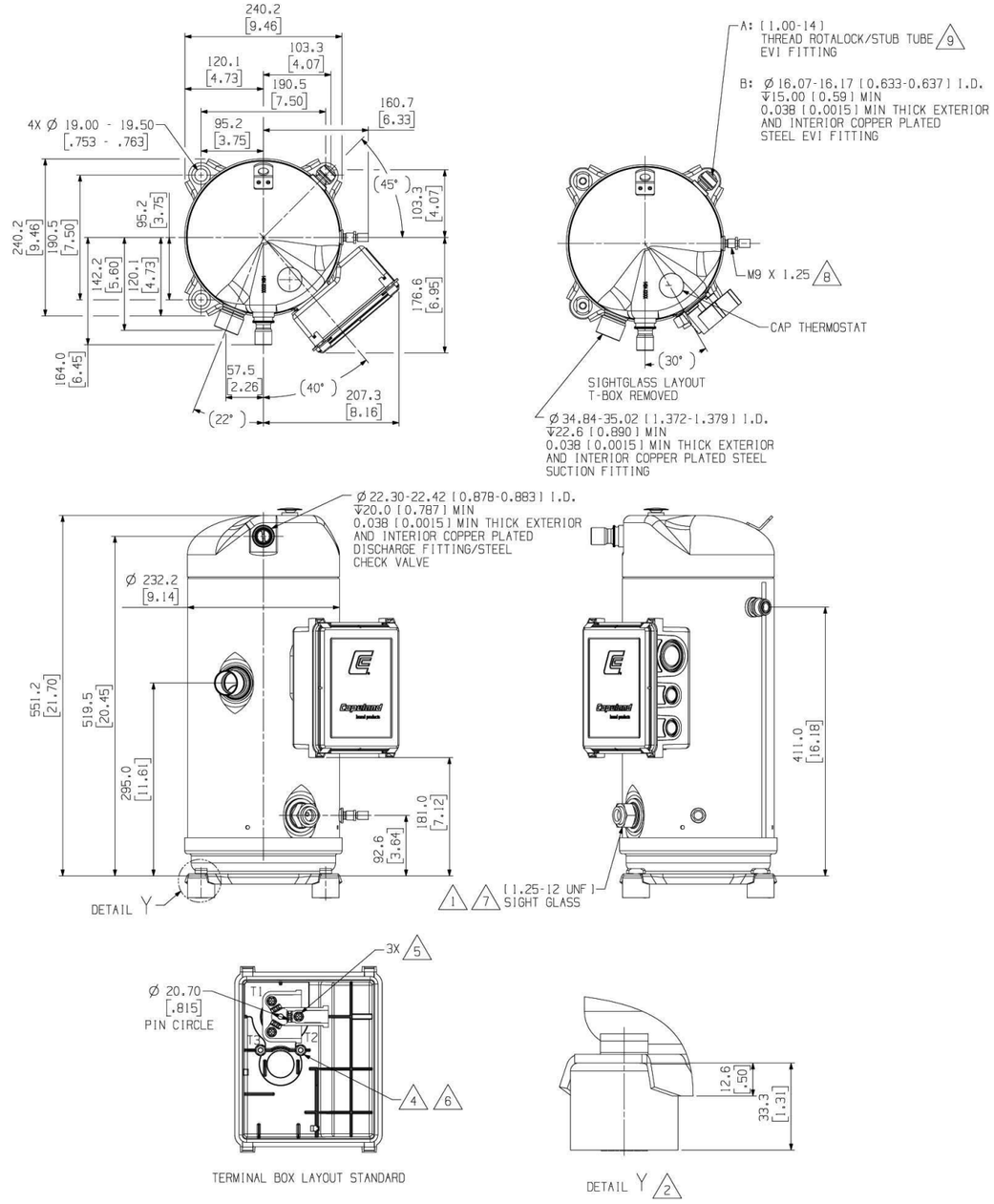

Notes:
(1) All tolerances ± 1.5mm [0.06in] unless otherwise specified
(2) Due to accumulated assembly tolerances, the listed components may vary from the mounting holes. All fittings: ± 3.0mm [0.12in]
(3) Tube ends must be plugged
(4) All units are in mm[inch]

Dimensional drawings

ZFI50KQE – ZFI59KQE (BOM 554)
Stub tube connection

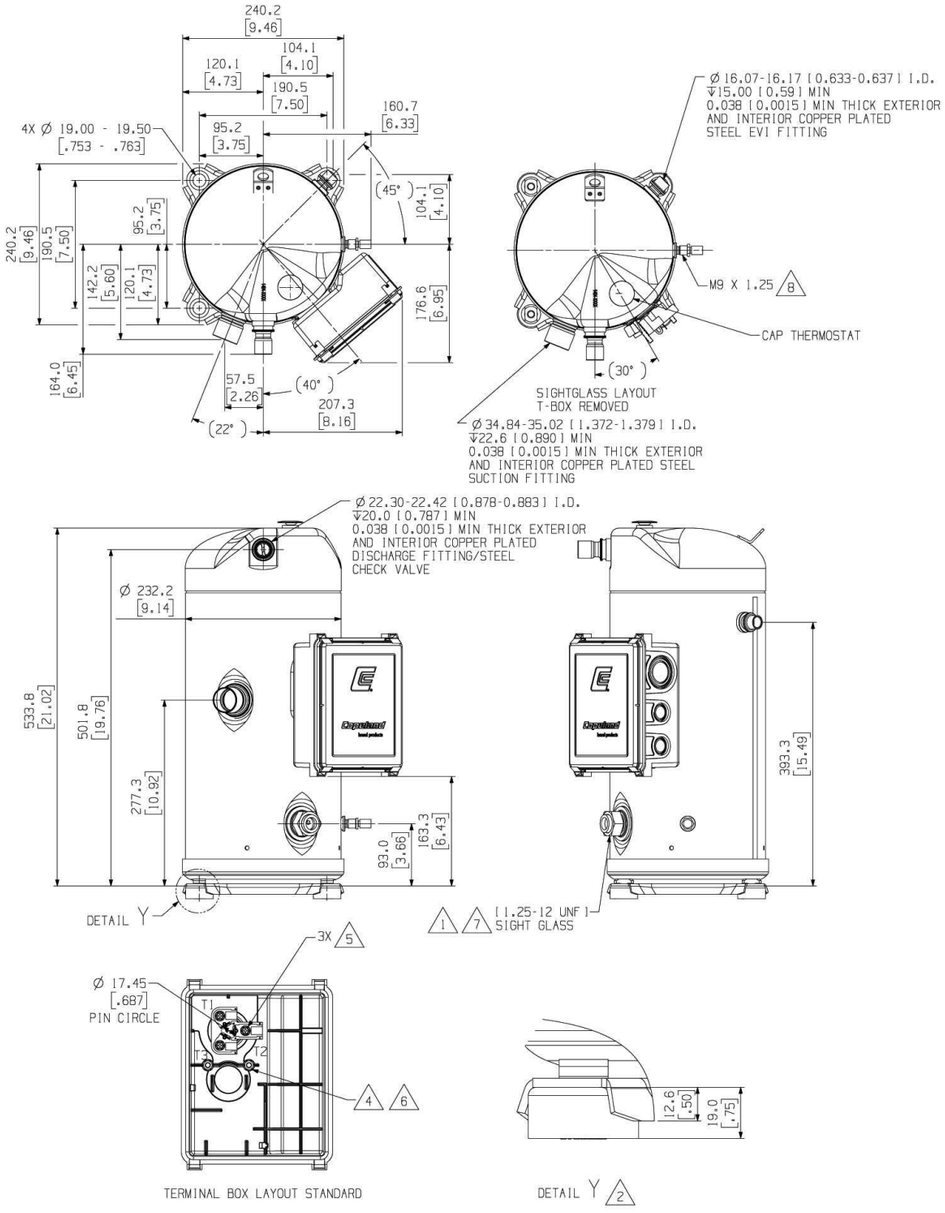

Notes:
(1) All tolerances ± 1.5mm [0.06in] unless otherwise specified
(2) Due to accumulated assembly tolerances, the listed components may vary from the mounting holes. All fittings: ± 3.0mm [0.12in]
(3) Tube ends must be plugged
(4) All units are in mm[inch]

Dimensional drawings

ZFI68/81KQE–TFD/TF7 (BOM 554)
Stub tube connection

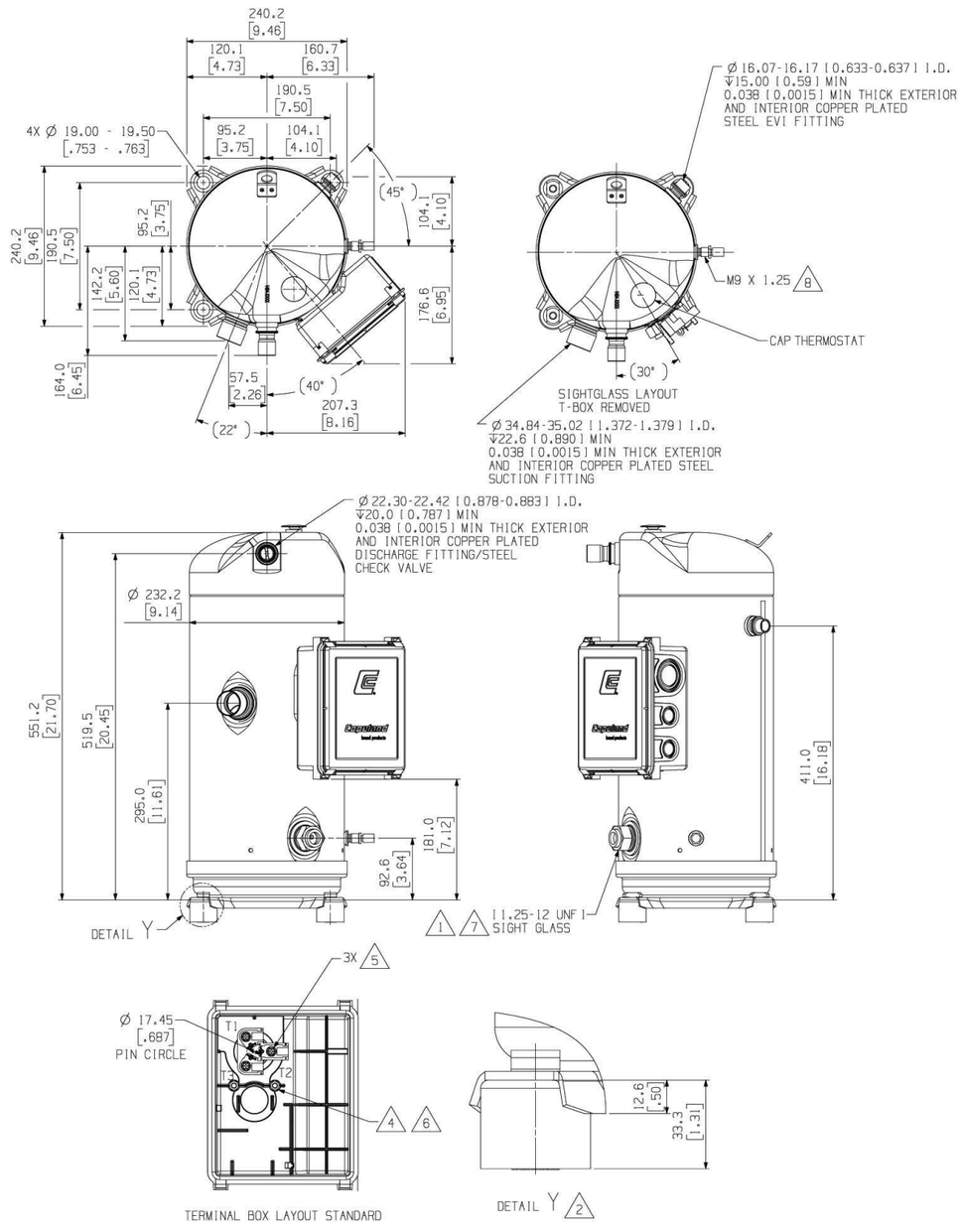

Notes:
(1) All tolerances ± 1.5mm [0.06in] unless otherwise specified
(2) Due to accumulated assembly tolerances, the listed components may vary from the mounting holes. All fittings: ± 3.0mm [0.12in]
(3) Tube ends must be plugged
(4) All units are in mm[inch]

Dimensional drawings

ZFI96/122/140KQE-TED/TE7/TEC (BOM522/523)

Stub tube / Rotalock connection

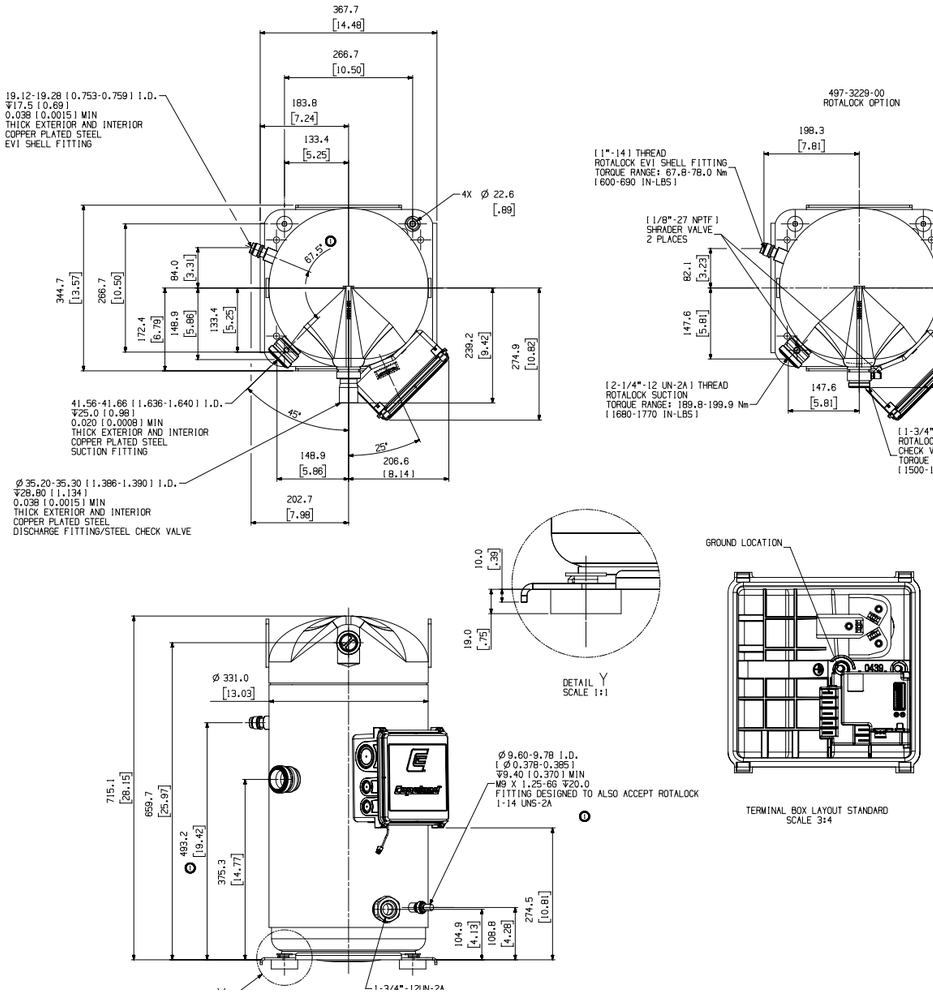

Notes:
(1) All tolerances ± 1.5mm [0.06in] unless otherwise specified
(2) Due to accumulated assembly tolerances, the listed components may vary from the mounting holes. All fittings: ± 3.0mm [0.12in]
(3) Tube ends must be plugged
(4) All units are in mm[inch]

Dimensional drawings

DTC Valve prints

ZF06-28

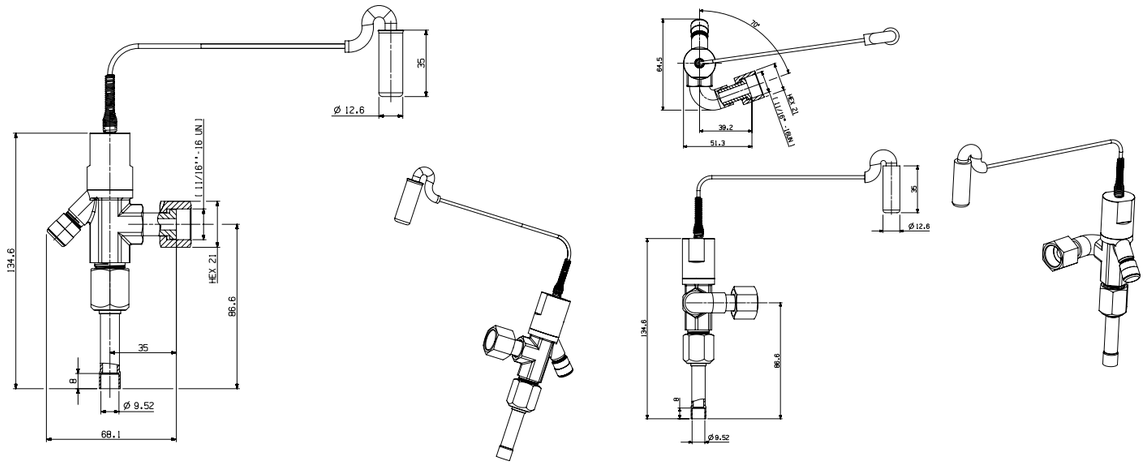

ZF34-54

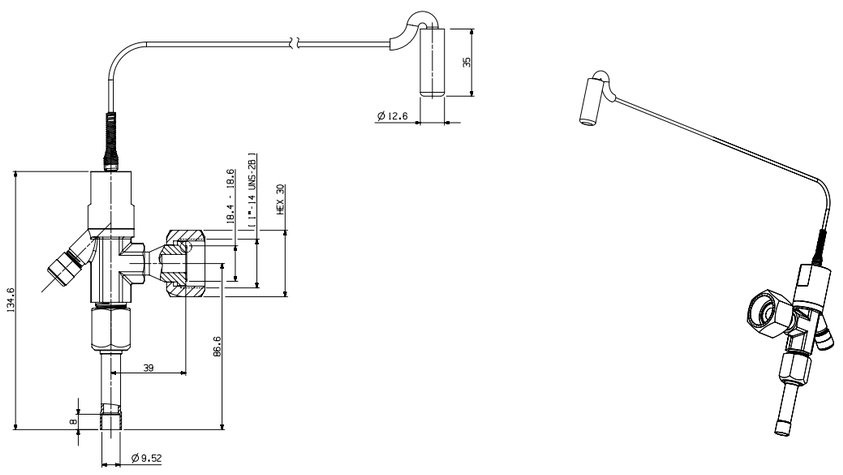

Note: Unit is mm

Dimensional drawings

CoreSense module

ZFI20 - ZFI140

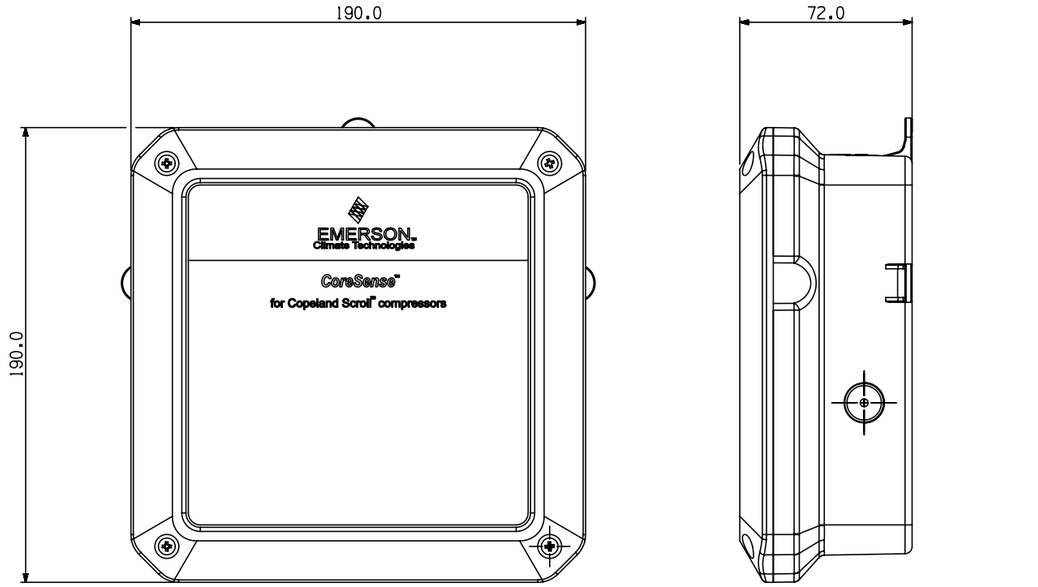

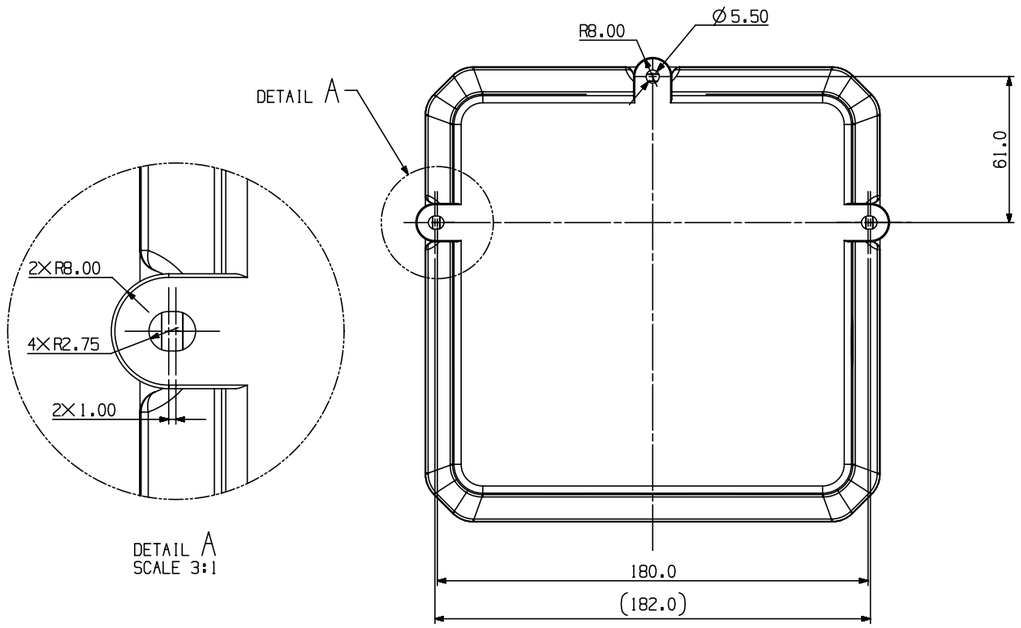

Note: Unit is mm

Schematic diagram

Liquid injection schematic

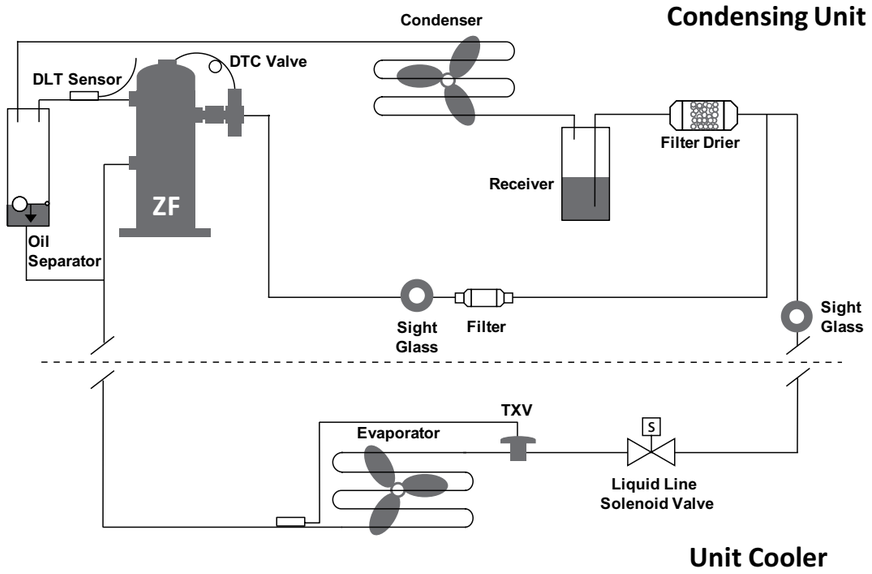

Vapor injection schematic

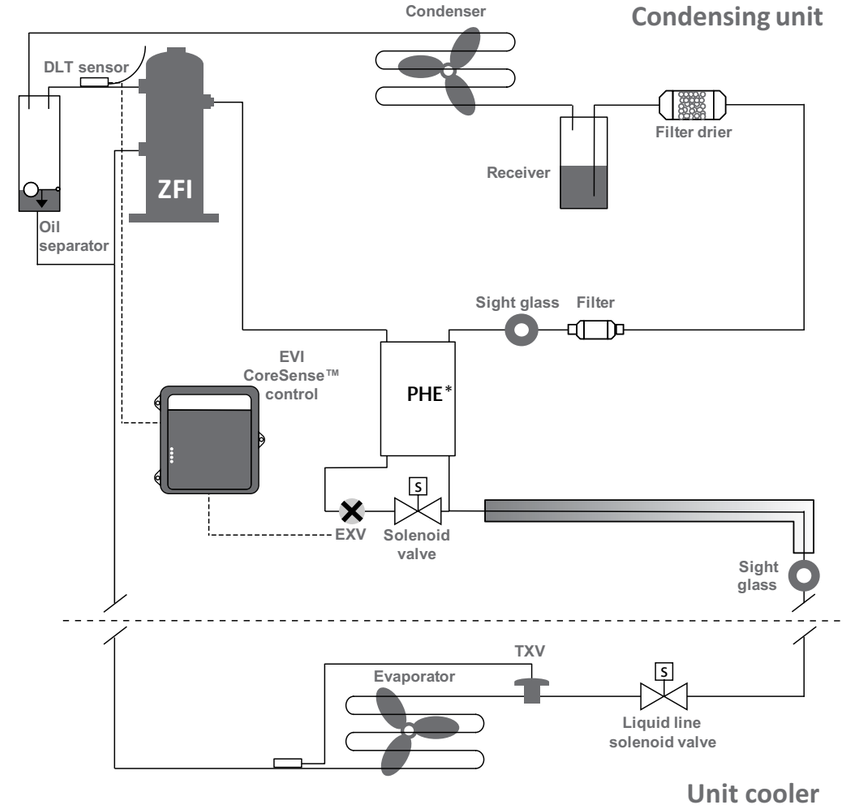

*PHE: Plate heat exchanger

Available models – ZF Liquid injection

Model	ZF Liquid injection models			
	Rotalock	Stub tube	Manufacturing plant	Status
TFD 380-420V-3ph-50Hz ; 460V-3ph-60Hz	ZF06KQE-TFD-551	ZF06KQE-TFD-550	Thailand	Active
	ZF08KQE-TFD-551	ZF08KQE-TFD-550	Thailand	Active
	ZF09KQE-TFD-551	ZF09KQE-TFD-550	Thailand	Active
	ZF11KQE-TFD-551	ZF11KQE-TFD-550	Thailand	Active
	ZF13KQE-TFD-551	ZF13KQE-TFD-550	Thailand	Active
	ZF15KQE-TFD-551	ZF15KQE-TFD-550	Thailand	Active
	ZF18KQE-TFD-551	ZF18KQE-TFD-550	Thailand	Active
	ZF25KQE-TFD-551	ZF25KQE-TFD-550	Thailand	Active
	ZF28KQE-TFD-551	ZF28KQE-TFD-550	Thailand	Active
	ZF34KQE-TFD-564	ZF34KQE-TFD-554	Thailand	Active
	ZF41KQE-TFD-564	ZF41KQE-TFD-554	Thailand	Active
	ZF49KQE-TFD-564	ZF49KQE-TFD-554	Thailand	Active
	ZF54KQE-TFD-564	ZF54KQE-TFD-554	Thailand	Active
TF5 200-220V-3ph-50Hz ; 200-230V-3ph-60Hz TFC 200V-3ph-50Hz ; 208-230V-3ph-60Hz	ZF06KQE-TF5-551	ZF06KQE-TF5-550	Thailand	Active
	ZF08KQE-TF5-551	ZF08KQE-TF5-550	Thailand	Active
	ZF09KQE-TF5-551	ZF09KQE-TF5-550	Thailand	Active
	ZF11KQE-TF5-551	ZF11KQE-TF5-550	Thailand	Active
	ZF13KQE-TFC-551	ZF13KQE-TFC-550	Thailand	Active
	ZF13KQE-TFC-551	ZF13KQE-TFC-550	Thailand	Active
	ZF15KQE-TFC-551	ZF15KQE-TFC-550	Thailand	Active
	ZF18KQE-TFC-551	ZF18KQE-TFC-550	Thailand	Active
	ZF15KQE-TFC-551	ZF15KQE-TFC-550	Thailand	Active
	ZF18KQE-TFC-551	ZF18KQE-TFC-550	Thailand	Active
	ZF25KQE-TFC-551	ZF25KQE-TFC-550	Thailand	Active
	ZF28KQE-TFC-591	ZF28KQE-TFC-580	Thailand	Active
	ZF34KQE-TFC-564 / 567	ZF34KQE-TFC-554	Thailand	Active
	ZF41KQE-TFC-564 / 567	ZF41KQE-TFC-554	Thailand	Active
	ZF49KQE-TFC-564 / 567	ZF49KQE-TFC-554	Thailand	Active
	ZF54KQE-TFC-564 / 567	ZF54KQE-TFC-554	Thailand	Active
TF7 380V-3ph-60Hz	ZF13KQE-TF7-551	ZF13KQE-TF7-550	Thailand	Active
	ZF15KQE-TF7-551	ZF15KQE-TF7-550	Thailand	Active
	ZF18KQE-TF7-551	ZF18KQE-TF7-550	Thailand	Active
	ZF25KQE-TF7-551	ZF25KQE-TF7-550	Thailand	Active
	ZF28KQE-TF7-551	ZF28KQE-TF7-550	Thailand	Active
	ZF34KQE-TF7-564 / 567	ZF34KQE-TF7-554	Thailand	Active
	ZF41KQE-TF7-564 / 567	ZF41KQE-TF7-554	Thailand	Active
	ZF49KQE-TF7-564 / 567	ZF49KQE-TF7-554	Thailand	Active
	ZF54KQE-TF7-564 / 567	ZF54KQE-TF7-554	Thailand	Active
PFV 200V-1ph-50Hz ; 208-230V-1ph-60Hz	ZF06KQE-PFV-551	ZF06KQE-PFV-550	Thailand	Active
	ZF08KQE-PFV-551	ZF08KQE-PFV-550	Thailand	Active
	ZF09KQE-PFV-551	ZF09KQE-PFV-550	Thailand	Active
	ZF11KQE-PFV-551	ZF11KQE-PFV-550	Thailand	Active
	ZF13KQE-PFV-551	ZF13KQE-PFV-550	Thailand	TBD
	ZF15KQE-PFV-551	ZF15KQE-PFV-550	Thailand	TBD

Notes: Please select the right BOMs when ZFI50-81 models are used in Rack application (BOM554/564 for OMB and 567 for OM3)

Available models – ZFI Vapor injection

Model	ZFI Vapor injection models			
	Rotalock	Stub tube	Manufacturing plant	Status
TFD/TED 380-420V-3ph-50Hz ; 460V-3ph-60Hz	ZFI20KQE-TFD-552	ZFI20KQE-TFD-550	Thailand	Active
	ZFI23KQE-TFD-552	ZFI23KQE-TFD-550	Thailand	Active
	ZFI26KQE-TFD-552	ZFI26KQE-TFD-550	Thailand	Active
	ZFI36KQE-TFD-552	ZFI36KQE-TFD-550	Thailand	Active
	ZFI39KQE-TFD-552	ZFI39KQE-TFD-550	Thailand	Active
	ZFI50KQE-TFD-564 / 567	ZFI50KQE-TFD-554	Thailand	Active
	ZFI59KQE-TFD-564 / 567	ZFI59KQE-TFD-554	Thailand	Active
	ZFI68KQE-TFD-564 / 567	ZFI68KQE-TFD-554	Thailand	Active
	ZFI81KQE-TFD-564 / 567	ZFI81KQE-TFD-554	Thailand	Active
	ZFI96KQE-TED-523	ZFI96KQE-TED-522	Suzhou, China	Active
	ZFI122KQE-TED-523	ZFI122KQE-TED-522	Suzhou, China	Active
	ZFI140KQE-TED-523	ZFI140KQE-TED-522	Suzhou, China	Active
TFC/TEC 200V-3ph-50Hz ; 208-230V-3ph-60Hz	ZFI20KQE-TFC-552	ZFI20KQE-TFC-550	Thailand	Active
	ZFI23KQE-TFC-552	ZFI23KQE-TFC-550	Thailand	Active
	ZFI26KQE-TFC-552	ZFI26KQE-TFC-550	Thailand	Active
	ZFI36KQE-TFC-552	ZFI36KQE-TFC-550	Thailand	Active
	ZFI39KQE-TFC-592	ZFI39KQE-TFC-580	Thailand	Active
	ZFI50KQE-TFC-564 / 567	ZFI50KQE-TFC-554	Thailand	Active
	ZFI59KQE-TFC-564 / 567	ZFI59KQE-TFC-554	Thailand	Active
	ZFI68KQE-TFC-564 / 567	ZFI68KQE-TFC-554	Thailand	Active
	ZFI81KQE-TFC-564 / 567	ZFI81KQE-TFC-554	Thailand	Active
	ZFI96KQE-TEC-523	ZFI96KQE-TEC-522	Suzhou, China	Active
	ZFI122KQE-TEC-523	ZFI122KQE-TEC-522	Suzhou, China	Active
	ZFI140KQE-TEC-523	ZFI140KQE-TEC-522	Suzhou, China	Active
TF7/TE7 380V-3ph-60Hz	ZFI20KQE-TF7-552	ZFI20KQE-TF7-550	Thailand	Active
	NA	ZFI23KQE-TF7-550	Thailand	Active
	ZFI26KQE-TF7-552	ZFI26KQE-TF7-550	Thailand	Active
	ZFI36KQE-TF7-552	ZFI36KQE-TF7-550	Thailand	Active
	ZFI39KQE-TF7-552	ZFI39KQE-TF7-550	Thailand	Active
	ZFI50KQE-TF7-564 / 567	ZFI50KQE-TF7-554	Thailand	Active
	ZFI59KQE-TF7-564 / 567	ZFI59KQE-TF7-554	Thailand	Active
	ZFI68KQE-TF7-564 / 567	ZFI68KQE-TF7-554	Thailand	Active
	ZFI81KQE-TF7-564 / 567	ZFI81KQE-TF7-554	Thailand	Active
	ZFI96KQE-TE7-523	ZFI96KQE-TE7-522	Suzhou, China	Active
	ZFI122KQE-TE7-523	ZFI122KQE-TE7-522	Suzhou, China	Active
	ZFI140KQE-TE7-523	ZFI140KQE-TE7-522	Suzhou, China	Active

Notes: Please select the right BOMs when ZFI50-81 models are used in Rack application (BOM554/564 for OMB and 567 for OM3)

ZF06-54, ZFI20-140 Accessory list

Item	Parts	Part Number	Description	Liquid Injection Models													Vapor Injection Models												Source
				ZF06KQE	ZF08KQE	ZF09KQE	ZF11KQE	ZF13KQE	ZF15KQE	ZF18KQE	ZF25KQE	ZF28KQE	ZF34KQE	ZF41KQE	ZF49KQE	ZF54KQE	ZFI20KQE	ZFI23KQE	ZFI26KQE	ZFI36KQE	ZFI39KQE	ZFI50KQE	ZFI59KQE	ZFI68KQE	ZFI81KQE	ZFI96KQE	ZFI122KQE	ZFI140KQE	
1	Mounting Kits for Single Unit	527-0116-00	Mounting for single, 35-45 durometer, 1.45"OD, 0.44"ID, 0.75"Height	std.	std.	std.	std.	std.	std.	std.	std.	std.	std.	std.	-	-	std.	std.	std.	std.	std.	std.	-	-	-	-	-	Suzhou or Thailand
	Mounting Kits for Single Unit	527-0210-00	Mounting for single, 55-65 durometer, 1.62"OD, 0.44"ID, 1.75"Height	-	-	-	-	-	-	-	-	-	-	-	std.	std.	-	-	-	-	-	-	-	std.	std.	-	-	-	Suzhou or Thailand
	Mounting Kits for Single Unit	527-0175-02	Mounting for single, 40 durometer, 2.17"OD, 0.50"ID, 0.75"Height	-	-	-	-	-	-	-	-	-	-	-	-	-	-	-	-	-	-	-	-	-	std.	std.	std.	Suzhou
	Mounting Kits for Rack Unit	527-0157-00	High Durometer(60-70) Mounting for Rack,1.62"OD, 0.44"ID, 1.16"Height	-/1	-/1	-/1	-/1	-/1	-/1	-/1	-/1	-/1	-	-	-	-	-/1	-/1	-/1	-/1	-/1	-	-	-	-	-	-	-	US
	Mounting Kits for Rack Unit	998-0178-00	Hard Mounting for Rack,1.87"OD, 0.69"ID, 0.31"Height	-	-	-	-	-	-	-	-	-	-/1	-/1	-/1	-/1	-	-	-	-	-	-/1	-/1	-/1	-/1	-	-	-	US
2	Crankcase Heater	018-0095-04	Crankcase Heater, 240V, 70W, 48"(120cm) Lead length, 48"(120cm) Ground wire	1/-	1/-	1/-	1/-	1/-	1/-	1/-	1/-	1/-	-	-	-	-	1/-	1/-	1/-	1/-	1/-	-	-	-	-	-	-	-	US
	Crankcase Heater	018-0095-05	Crankcase Heater, 480V, 70W, 48"(120cm) Lead length, 48"(120cm) Ground wire	-/1	-/1	-/1	-/1	-/1	-/1	-/1	-/1	-/1	-	-	-	-	-/1	-/1	-/1	-/1	-/1	-	-	-	-	-	-	-	US
	Crankcase Heater	018-0091-22	Crankcase Heater, 240V, 90W, 48"(120cm)Lead length, 48"(120cm) Ground wire	-	-	-	-	-	-	-	-	-	1/-	1/-	1/-	1/-	-	-	-	-	-	1/-	1/-	1/-	1/-	-	-	-	US
	Crankcase Heater	018-0091-23	Crankcase Heater, 480V, 90W, 48"(120cm)Lead length, 48"(120cm) Ground wire	-	-	-	-	-	-	-	-	-	-/1	-/1	-/1	-/1	-	-	-	-	-	-/1	-/1	-/1	-/1	-	-	-	US
	Crankcase Heater	018-0091-09	Crankcase Heater, 240V, 140W,71cm Lead length, 71cm Ground wire	-	-	-	-	-	-	-	-	-	-	-	-	-	-	-	-	-	-	-	-	-	-	1	1	1	US
3	DTC Kits	510-0875-01	DTC Valve 120°C, 11/16", Liquid line Ø9.52mm (ALCO 802504)	1/-	1/-	1/-	1/-	1/-	1/-	1/-	1/-	1/-	-	-	-	-	-	-	-	-	-	-	-	-	-	-	-	-	EUR
	DTC Kits	510-0875-02	DTC Valve 120°C, 11/16" with 70° Outlet, Liquid line Ø9.52mm (ALCO 802506)	-/1	-/1	-/1	-/1	-/1	-/1	-/1	-/1	-/1	-	-	-	-	-	-	-	-	-	-	-	-	-	-	-	-	EUR
	DTC Kits	510-0875-00	DTC Valve 120°C, 1", Liquid line Ø9.52mm (ALCO 802505)	-	-	-	-	-	-	-	-	-	1	1	1	1	-	-	-	-	-	-	-	-	-	-	-	-	EUR
4	Discharge Line Thermostat	085-0248-00	Discharge line thermostat with clip (8409496),130°C, 5/8" clip	1	1	1	1	1	1	1	1	1	-	-	-	-	-	-	-	-	-	-	-	-	-	-	-	-	EUR
	Discharge Line Thermostat	085-0227-00	Discharge Line Thermostat with clip (8615262), 130°C, 7/8" clip	-	-	-	-	-	-	-	-	-	1	1	1	1	-	-	-	-	-	-	-	-	-	-	-	-	EUR
5	Plate Heat Exchanger	067-0035-00	Plate Heat Exchanger B8TH x14	-	-	-	-	-	-	-	-		-	-	-	-	1	1	1	1	1	-	-	-	-	-	-	-	Suzhou
	Plate Heat Exchanger	067-0036-00	Plate Heat Exchanger B8TH x20	-	-	-	-	-	-	-	-		-	-	-	-	-	-	-	-	-	1	1	1	-	-	-	-	Suzhou
	Plate Heat Exchanger	067-0070-00	Plate Heat Exchanger B8TH x24	-	-	-	-	-	-	-	-		-	-	-	-	-	-	-	-	-	-	-	-	-	1	-	-	Suzhou
	Plate Heat Exchanger	067-0067-00	Plate Heat Exchanger B10TH x40	-	-	-	-	-	-	-	-		-	-	-	-	-	-	-	-	-	-	-	-	-	-	1	1	1	Suzhou
6	Suction & Discharge Valve Kits	998-5100-42	Suction & Discharge Valve with Seal (1 1/4" -12 Thread to 3/4" Sweat Suction Valve, 1'-14 Thread to 1/2" Sweat Discharge Valve)	1	1	1	1	-	-	-	-	-	-	-	-	-	-	-	-	-	-	-	-	-	-	-	-	-	US
	Suction & Discharge Valve Kits	998-5100-48	Suction & Discharge Valve with Seal (1 1/4" -12 Thread to 7/8" Sweat Suction Valve, 1'-14 Thread to 1/2" Sweat Discharge Valve)	-	-	-	-	1	1	1	-	-	-	-	-	-	1	1	1	-	-	-	-	-	-	-	-	-	US
	Suction & Discharge Valve Kits	998-5100-62	Suction & Discharge Valve with Seal (1 1/4" -12 Thread to 7/8" Sweat Suction Valve, 1 1/4"-12 Thread to 3/4" Sweat Discharge Valve)	-	-	-	-	-	-	-	1	1	-	-	-	-	-	-	-	1	1	-	-	-	-	-	-	-	US
	Suction & Discharge Valve Kits	998-5100-27	Suction & Discharge Valve with Seal (1 3/4"-12 Thread to 1 3/8" Sweat Suction Valve, 1 1/4"-12 Thread to 7/8" Sweat Discharge Valve)	-	-	-	-	-	-	-	-	-	1	1	1	1	-	-	-	-	-	1	1	1	1	-	-	-	US
	Discharge Service Valve	998-0510-46	Discharge Service Valve Kits, 1-3/4" Thread to 1-3/8" Sweat	-	-	-	-	-	-	-	-	-	-	-	-	-	-	-	-	-	-	-	-	-	-	1	1	1	US
	Suction Service Valve	998-0510-68	Suction Service Valve Kits, 2-1/4" Thread to 1-5/8" sweat	-	-	-	-	-	-	-	-	-	-	-	-	-	-	-	-	-	-	-	-	-	-	1	1	1	US
7	Adapter Suction Rotalock to Stub	998-0034-13	Adapter Suction Rotalock to Stub (1 3/4"-12 Thread to 1 3/8" Sweat)	-	-	-	-	-	-	-	-	-	1	1	1	1	-	-	-	-	-	1	1	1	1	-	-	-	US
	Adapter Discharge Rotalock to Stub	998-0034-08	Adapter Discharge Rotalock to Stub (1 1/4"-12 Thread to 7/8" Sweat)	-	-	-	-	-	-	-	-	-	1	1	1	1	-	-	-	-	-	1	1	1	1	-	-	-	US
	Adapter Injection Rotalock to Stub	998-0034-18	Adapter Injection Rotalock to Stub (1'-14 Thread to 1/2" ID Sweat)	-	-	-	-	-	-	-	-		1	1	1	1	1	1	1	1	1	1	1	1	1	1	1	1	US
	Adapter Injection Rotalock to Stub	534-0072-00	Adapter Injection Rotalock to Stub (11/16" Thread to 1/2" ID Sweat)	1	1	1	1	1	1	1	1	1	-	-	-	-	-	-	-	-	-	-	-	-	-	-	-	-	Suzhou
8	EVI Control Kits (China domestic)	562-0313-00	EVI Control Kits w/o CoreSense Box, Ø1.3mm EXV valve orifice size	-	-	-	-	-	-	-	-	-	-	-	-	-	1	1	1	-	-	-	-	-	-	-	-	-	Suzhou
	EVI Control Kits (China domestic)	562-0313-01	EVI Control Kits w/o CoreSense Box, Ø1.65mm EXV valve orifice size	-	-	-	-	-	-	-	-	-	-	-	-	-	-	-	-	1	1	1	1	-	-	-	-	-	Suzhou
	EVI Control Kits (China domestic)	562-0313-02	EVI Control Kits w/o CoreSense Box, Ø1.8mm EXV valve orifice size	-	-	-	-	-	-	-	-	-	-	-	-	-	-	-	-	-	-	-	-	1	1	-	-	-	Suzhou
	EVI Control Kits (China domestic)	562-0313-03	EVI Control Kits w/o CoreSense Box, Ø2.4mm EXV valve orifice size	-	-	-	-	-	-	-	-	-	-	-	-	-	-	-	-	-	-	-	-	-	-	1	1	1	Suzhou
	EVI Control Kits (China domestic)	562-0291-01	EVI Control Kits with CoreSense Box, Ø1.3mm EXV valve orifice size, IP54	-	-	-	-	-	-	-	-	-	-	-	-	-	1	1	1	-	-	-	-	-	-	-	-	-	Suzhou
	EVI Control Kits (China domestic)	562-0291-02	EVI Control Kits with CoreSense Box, Ø1.65mm EXV valve orifice size, IP54	-	-	-	-	-	-	-	-	-	-	-	-	-	-	-	-	1	1	1	1	-	-	-	-	-	Suzhou
	EVI Control Kits (China domestic)	562-0291-03	EVI Control Kits with CoreSense Box, Ø1.8mm EXV valve orifice size, IP54	-	-	-	-	-	-	-	-	-	-	-	-	-	-	-	-	-	-	-	-	1	1	-	-	-	Suzhou
	EVI Control Kits (China domestic)	562-0291-06	EVI Control Kits with CoreSense Box, Ø2.4mm EXV valve orifice size, IP54	-	-	-	-	-	-	-	-	-	-	-	-	-	-	-	-	-	-	-	-	-	-	1	1	1	Suzhou
9	Control Box	562-0292-00	EVI Control Board Assembly, with CoreSense Box	-	-	-	-	-	-	-	-	-	-	-	-	-	1	1	1	1	1	1	1	1	1	1	1	1	Suzhou
10	Control Board	543-0189-01	Control Board, fasten by screw in CoreSense Box, 4* Ø5mm holes at 61 x 101 mm centers	-	-	-	-	-	-	-	-	-	-	-	-	-	1	1	1	1	1	1	1	1	1	1	1	1	Suzhou
	Control Board	543-0219-01	Control Board, fasten by plastic stakes, 4* Ø4mm holes at 61 x 101 mm centers	-	-	-	-	-	-	-	-	-	-	-	-	-	1	1	1	1	1	1	1	1	1	1	1	1	Suzhou
11	Transformer	037-0029-00	Transformer, Input 220VAC, Output 12VAC, 50/60Hz	-	-	-	-	-	-	-	-	-	-	-	-	-	1	1	1	1	1	1	1	1	1	1	1	1	Suzhou
12	DLT Sensor	043-0277-00	DLT Sensor, 1800mm wire length	-	-	-	-	-	-	-	-	-	-	-	-	-	1	1	1	1	1	1	1	1	1	1	1	1	Suzhou
	DLT Sensor	043-0277-01	DLT Sensor, 4500mm wire length	-	-	-	-	-	-	-	-	-	-	-	-	-	-/1	-/1	-/1	-/1	-/1	-/1	-/1	-/1	-/1	-/1	-/1	-/1	Suzhou
13	Vapor in Sensor	043-0210-00	Vapor In Sensor, 1800mm wire length	-	-	-	-	-	-	-	-	-	-	-	-	-	1	1	1	1	1	1	1	1	1	1	1	1	Suzhou
	Vapor in Sensor	043-0278-00	Vapor In Sensor, 4500mm wire length	-	-	-	-	-	-	-	-	-	-	-	-	-	-/1	-/1	-/1	-/1	-/1	-/1	-/1	-/1	-/1	-/1	-/1	-/1	Suzhou
14	Vapor out Sensor	043-0210-02	Vapor out Sensor, 1800mm wire length	-	-	-	-	-	-	-	-	-	-	-	-	-	1	1	1	1	1	1	1	1	1	1	1	1	Suzhou
	Vapor out Sensor	043-0279-00	Vapor out Sensor, 4500mm wire length	-	-	-	-	-	-	-	-	-	-	-	-	-	-/1	-/1	-/1	-/1	-/1	-/1	-/1	-/1	-/1	-/1	-/1	-/1	Suzhou
15	EXV Filter	013-0212-00	EXV Filter, Liquid In Ø8.65mm ID, Liquid Out Ø6.5mm ID, 100 mesh	-	-	-	-	-	-	-	-	-	-	-	-	-	1	1	1	1	1	1	1	1	1	1	1	1	Suzhou
16	EXV-Coil	023-0111-00	EXV-Coil, 1796mm wire length	-	-	-	-	-	-	-	-	-	-	-	-	-	1	1	1	1	1	1	1	1	1	1	1	1	Suzhou
	EXV-Coil	023-0111-01	EXV-Coil, 4500mm wire length		-	-	-	-	-	-	-	-	-	-	-	-	-/1	-/1	-/1	-/1	-/1	-/1	-/1	-/1	-/1	-/1	-/1	-/1	Suzhou
17	EXV-Valve	010-0240-00	EXV valve, Ø1.3mm orifice size(TS113C0x), 2*Ø6.35mm OD	-	-	-	-	-	-	-	-	-	-	-	-	-	1	1	1	-	-	-	-	-	-	-	-	-	Suzhou
	EXV-Valve	010-0240-01	EXV valve, Ø1.65mm orifice size(TS116C0x),2*Ø6.35mm OD	-	-	-	-	-	-	-	-	-	-	-	-	-	-	-	-	1	1	1	1	-	-	-	-	-	Suzhou
	EXV-Valve	010-0240-02	EXV valve, Ø1.8mm orifice size(TS118C0x), 2*Ø6.35mm OD	-	-	-	-	-	-	-	-	-	-	-	-	-	-	-	-	-	-	-	-	1	1	-	-	-	Suzhou
	EXV-Valve	010-0240-03	EXV valve, Ø2.4mm orifice size(TS124C0x), 2*Ø6.35mm OD	-	-	-	-	-	-	-	-	-	-	-	-	-	-	-	-	-	-	-	-	-	-	1	1	1	Suzhou
18	Cable gland	036-1310-01	Cable gland -1	-	-	-	-	-	-	-	-	-	-	-	-	-	1	1	1	1	1	1	1	1	1	1	1	1	Suzhou
	Cable gland	036-1439-00	Cable gland -2	-	-	-	-	-	-	-	-	-	-	-	-	-	1	1	1	1	1	1	1	1	1	1	1	1	Suzhou
	Cable gland	036-1426-00	Cable gland -3	-	-	-	-	-	-	-	-	-	-	-	-	-	1	1	1	1	1	1	1	1	1	1	1	1	Suzhou
19	Tube for sensor	028-3998-00	Tube for sensor	-	-	-	-	-	-	-	-	-	-	-	-	-	3	3	3	3	3	3	3	3	3	3	3	3	Suzhou
20	Spring clip	032-0962-00	Spring clip	-	-	-	-	-	-	-	-	-	-	-	-	-	3	3	3	3	3	3	3	3	3	3	3	3	Suzhou
21	Bolts group	521-0355-00	Bolts, 3pcs for CoreSense Box	-	-	-	-	-	-	-	-	-	-	-	-	-	1	1	1	1	1	1	1	1	1	1	1	1	Suzhou
22	CoreSense Module	571-0064-06	P47 CoreSense Module 120/220V	-	-	-	-	-	-	-	-	-	-	-	-	-	-	-	-	-	-	-	-	-	-	std.	std.	std.	Suzhou

Notes: Standard: Included in the compressor; 1 or -/1 : Option to choose either one





Vapor injection scroll standard order list

Part Number		Description	Unit, Pcs	Vapor injection models												Source
				ZFI20	ZFI23	ZFI26	ZFI36	ZFI39	ZFI50	ZFI59	ZFI68	ZFI81	ZFI96	ZFI122	ZFI140	
Compressor	-	-	1	ZFI20KQE -TFD/7/C -552/550	ZFI23KQE -TFD/7/C -552/550	ZFI26KQE -TFD/7/C -552/550	ZFI36KQE -TFD/7/C -552/550	ZFI39KQE -TFD/7 -552/550	ZFI50KQE -TFD/7/C -564/567/554	ZFI59KQE -TFD/7/C -564/567/554	ZFI68KQE -TFD/7/C -564/567/554	ZFI81KQE -TFD/7/C -564/567/554	ZFI96KQE -TED/7/C -523/522	ZFI122KQE -TED/7/C -523/522	ZFI140KQE -TED/7/C -523/522	ZFI20-81 in Thailand ZFI96-140 in Suzhou (Option 1 EVI kits for TF*/TE* and option 2 for TF*/TR* motor code)
													ZFI96KQE -TRD/7/C -523/522	ZFI122KQE -TRD/7/C -523/522	ZFI140KQE -TRD/7/C -523/522	
EVI control kits (option 1, old)	562-0292-00	EVI Control Board Assembly, with CoreSense™ Box	1	●	●	●	●	●	●	●	●	●	●	●	●	Suzhou
	036-1310-01	Cable gland -1	1	●	●	●	●	●	●	●	●	●	●	●	●	Suzhou
	036-1439-00	Cable gland -2	1	●	●	●	●	●	●	●	●	●	●	●	●	Suzhou
	036-1426-00	Cable gland -3	1	●	●	●	●	●	●	●	●	●	●	●	●	Suzhou
	043-0277-00	DLT Sensor, 1800mm wire length	1	●	●	●	●	●	●	●	●	●	●	●	●	Suzhou
	043-0210-00	Vapor In Sensor, 1800mm wire length	1	●	●	●	●	●	●	●	●	●	●	●	●	Suzhou
	043-0210-02	Vapor out Sensor, 1800mm wire length	1	●	●	●	●	●	●	●	●	●	●	●	●	Suzhou
	028-3998-00	Tube for sensor	3	●	●	●	●	●	●	●	●	●	●	●	●	Suzhou
	032-0962-00	Spring clip	3	●	●	●	●	●	●	●	●	●	●	●	●	Suzhou
	521-0355-00	Bolts, 3pcs for CoreSense™ Box	1	●	●	●	●	●	●	●	●	●	●	●	●	Suzhou
	013-0212-00	EXV Filter, Liquid In Ø8.65mm ID, Liquid Out Ø6.5mm ID, 100 mesh	1	●	●	●	●	●	●	●	●	●	●	●	●	Suzhou
	023-0111-00	EXV-Coil, 1796mm wire length	1	●	●	●	●	●	●	●	●	●	●	●	●	Suzhou
	010-0240-00	EXV valve, Ø1.3mm orifice size(TS113C0x), 2*Ø6.35mm OD	1	●	●	●	-	-	-	-	-	-	-	-	-	" Suzhou (562-0291-01)* "
	010-0240-01	EXV valve, Ø1.65mm orifice size(TS116C0x),2*Ø6.35mm OD	1	-	-	-	●	●	●	●	-	-	-	-	-	" Suzhou (562-0291-02)* "
	010-0240-02	EXV valve, Ø1.8mm orifice size(TS118C0x), 2*Ø6.35mm OD	1	-	-	-	-	-	-	-	●	●	-	-	-	" Suzhou (562-0291-03)* "
	010-0240-03	EXV valve, Ø2.4mm orifice size(TS124C0x), 2*Ø6.35mm OD	1	-	-	-	-	-	-	-	-	-	●	●	●	" Suzhou (562-0291-06)* "
EVI control kits (option 2, new)	571-0107-00	Smart Control Module, Plus 4	1	●	●	●	●	●	●	●	●	●	-	-	-	Suzhou
	036-1310-01	Cable Gland 1 - Single hole	1	-	-	-	-	-	●	●	●	●	●	●	●	Suzhou
	036-1439-00	Cable Gland 2 - 7 holes	1	-	-	-	-	-	●	●	●	●	●	●	●	Suzhou
	521-0398-00	Pin Connector Group	1	●	●	●	●	●	●	●	●	●	●	●	●	Suzhou
	543-0317-00	DLT Sensor, 1800mm wire length	1	●	●	●	●	●	●	●	●	●	-	-	-	Suzhou
	043-0285-00	Vapor In/out Sensor, 1800mm wire length	1	●	●	●	●	●	●	●	●	●	●	●	●	Suzhou
	074-1855-00	Module Bracket	1	●	●	●	●	●	-	-	-	-	-	-	-	Suzhou
	028-3998-00	Tube for sensor	3	●	●	●	●	●	●	●	●	●	●	●	●	Suzhou
	032-0962-00	Spring clip	3	●	●	●	●	●	●	●	●	●	●	●	●	Suzhou
	521-0355-00	Bolts, 3pcs for CoreSense™ Box	1	●	●	●	●	●	-	-	-	-	-	-	-	Suzhou
	013-0212-00	EXV Filter, Liquid In Ø8.65mm ID, Liquid Out Ø6.5mm ID, 100 mesh	1	●	●	●	●	●	●	●	●	●	●	●	●	Suzhou
	023-0111-00	EXV-Coil, 1796mm wire length	1	●	●	●	●	●	●	●	●	●	●	●	●	Suzhou
	010-0240-00	EXV valve, Ø1.3mm orifice size(TS113C0x), 2*Ø6.35mm OD	1	●	●	●	-	-	-	-	-	-	-	-	-	" Suzhou (562-0471-01)* "
	010-0240-01	EXV valve, Ø1.65mm orifice size(TS116C0x),2*Ø6.35mm OD	1	-	-	-	●	●	●	●	-	-	-	-	-	" Suzhou (562-0471-03/05)* "
	010-0240-02	EXV valve, Ø1.8mm orifice size(TS118C0x), 2*Ø6.35mm OD	1	-	-	-	-	-	-	-	●	●	-	-	-	" Suzhou (562-0471-07)* "
	010-0240-03	EXV valve, Ø2.4mm orifice size(TS124C0x), 2*Ø6.35mm OD	1	-	-	-	-	-	-	-	-	-	●	●	●	" Suzhou (562-0460-00)* "
PHE	067-0035-00	Plate Heat Exchanger B8TH x14	1	●	●	●	●	●	-	-	-	-	-	-	-	Suzhou
	067-0036-00	Plate Heat Exchanger B8TH x20	1	-	-	-	-	-	●	●	●	-	-	-	-	Suzhou
	067-0070-00	Plate Heat Exchanger B8TH x24	1	-	-	-	-	-	-	-	-	●	-	-	-	Suzhou
	067-0067-00	Plate Heat Exchanger B10TH x40	1	-	-	-	-	-	-	-	-	-	●	●	●	Suzhou

* Bundle kits package

Sound jacket

Emerson has developed a new sound jacket for noise sensitive applications. It is designed to be factory mounted by the equipment manufacturers or to be easily installed on site.

The sound jacket perfectly fits Copeland™ scroll refrigeration compressors from 7 to 30 HP including “Summit” and “Large Refrigeration Scroll” series compressors. The sound jacket provides an overall sound attenuation of 6 to 8 dB(A) making Copeland scroll compressors the lowest noise solution currently available in the market.

It contains 3 pieces in one carton box, including shell cover, top cap cover and terminal box cover.

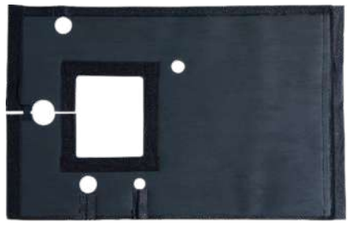

Shell cover



Top cap cover



Terminal box cover



Scroll compressor with and without sound jacket

Example: Sound power with and without sound jacket

ZB88 Medium temp scroll example

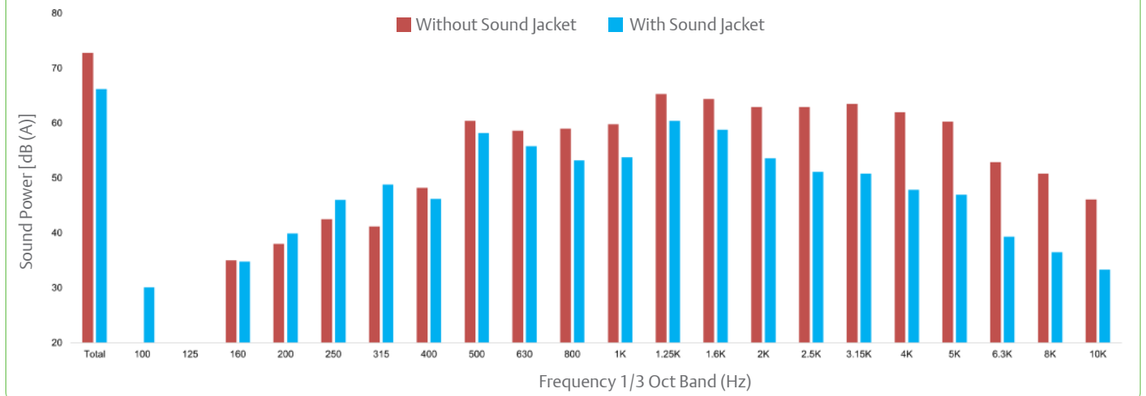

ZFI68 Low temp scroll example

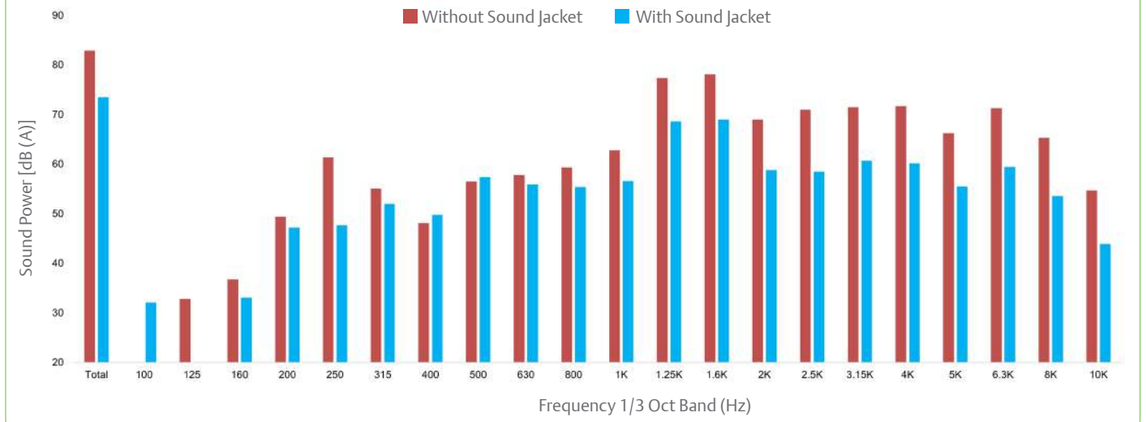

Customer order part number

Platform	Part number	Applied models	Source
Summit	505-1501-04	ZB58KQ/E	Suzhou
	505-1501-03	ZB66KQ/E, ZB76KQ/E, ZB88KQ	
	505-1501-01	ZB95KQ/E, ZB114KQ/E (TW* motor)	
	505-1501-06	ZB95KQ/E, ZB114KQ/E (TF* motor)	
	505-1501-05	ZB130KQ/E	
	505-1501-02	ZFI50KQE, ZFI59KQE	
	505-1501-00	ZFI68KQE, ZFI81KQE	
Large Refrigeration Scroll	505-1512-00	ZB150KQ/E	
	505-1512-01	ZB190KQ/E, ZB220KQ/E	
	505-1512-02	ZFI96KQE, ZFI122KQE, ZFI140KQE	

General information

Technical data are correct at the time of printing. Updates may occur, and should you need confirmation of a specific value, please contact Emerson stating clearly the information required.

Emerson cannot be held responsible for errors in capacities, dimensions, etc., stated herein. Products, specifications and data in this literature are subject to change without notice.

The information given herein is based on data and tests which Emerson believes to be reliable and which are in accordance with today's technical knowledge. It is intended for use by persons having the appropriate technical knowledge and skill, at their own discretion and risk. Our products are designed and adapted for fixed locations. For mobile applications, failures may occur.

The suitability for this has to be assured from the plant manufacturer, which may include making appropriate tests.

Note:

The components listed in this catalogue are not released for use with caustic, poisonous or flammable substances. Emerson cannot be held responsible for any damage caused by using these substances.

Notes

Contact Us

Asia Pacific Headquarters
Suite 2503-10A, 25/F, Exchange Tower,
33 Wang Chiu Road, Kowloon Bay,
Kowloon, Hong Kong
Tel: (852) 2866 3108
Fax: (852) 2520 6227

Australia
356 Chisholm Road
Auburn NSW 2144, Australia
Tel: (612) 9795 2800
Fax: (612) 9738 1699

China - Beijing
Room 1203-1205,
North Wing Junefield Plaza Central Tower,
No. 10 Xuan Wu Men Wai Street,
XiCheng District, Beijing, PRC
Tel: (8610) 5095 2188

China - Guangzhou
Guangzhou Office
Unit 2202B, 22/F, Leatop Plaza,
32 Zhujiang East Road, Tianhe Dist.,
Guangzhou 510623, PRC
Tel: (8620) 8595 5188

China - Shanghai
Shanghai Sales Office
7/F, Emerson Building, 1582 Gumei
Rd, Shanghai, PRC
Tel: (8621) 3338 7333

India - Mumbai
601-602, 6/F Delphi B-Wing,
Central Avenue,
Hiranandani Business Park,
Powai, Mumbai 400076, India
Tel: (9122) 6786 0793
Fax: (9122) 6662 050

India - Pune
Plot No. 23, Rajiv Gandhi Infotech Park,
Phase - II, Hinjewadi,
Pune 411 057, Maharashtra, India
Tel: (9120) 4200 2000
Fax: (9120) 4200 2099

Indonesia
14th floor, NorthTower,
Sampoerna Strategic Square
Jl. Jend. Sudirman Kav. 45-46, 12930,
Jakarta Indonesia
Tel : (6221) 2509 1400, (6221) 5793 1000
Fax : (6221) 5793 0883

Japan
No. 3-9-5 Shin-Yokohama,
Shin-yokohama Tosho Building,
Kohoku-ku, Yokohama,
222-0033 Japan
Tel: (8145) 475 6371
Fax: (8145) 475 3565

Malaysia
No. 1, Block A
Jalan SS13/5 Subang Jaya
Selangor 47500, Malaysia
Tel: (603) 5624 2888

Middle East & Africa
PO Box 26382
Jebel Ali Free Zone - South
Dubai, UAE
Tel: (9714) 811 8100
Fax: (9714) 886 5465

Philippines
10/F SM Cyber West Avenue,
EDSA cor. West Avenue,
Barangay Bungad, Diliman,
Quezon City 1105, Philippines
Tel: (632) 689 7200 ext. 4395

Saudi Arabia
PO Box 34332
3620 Building 7874, Unit 1,
67th street 2nd Industrial City
Dammam, Saudi Arabia
Toll Free: 800 844 3426
Tel: (966) 3814 7560
Fax: (966) 3814 7570

South Korea
14/F, NIA Building,
Cheonggyecheon-ro,
Jung-gu 04520, Seoul Korea
Tel: (822) 3483 1500
Fax: (822) 592 7883

Taiwan
3/F, No. 122 Lane 235,
Pao Chiau Rd., XinDianv Dist.,
New Taipei City 23145, Taiwan (R.O.C.)
Tel: (8862) 8912 1360
Fax: (8862) 8912 1890

Thailand
34/F, Interlink Tower,
1558/133, Bangna Tai,
Bangkok 10260, Thailand
Tel: (662) 716 4700
Fax: (662) 751 4241

United Arab Emirates
PO Box 26382
Jebel Ali Free Zone
Dubai, UAE
Toll Free: 800 441 3428
Tel: (971) 4811 8100
Fax: (971) 4886 5465

Vietnam
9.04/F, Block A2, Viettel Tower
285 Cach Mang Thang Tam, District 1
Ho Chi Minh City, Vietnam
Tel: (84) 28 6290 8243

Scan to visit:

Emerson Asia

Climate.Emerson.com/Asia

@EmersonComResAP

Asia 03 00 Issued 10/2022 Emerson is a trademark of Emerson Electric Co. or one of its affiliated companies.
©2022 Emerson Electric Co. All rights reserved.

EMERSON. CONSIDER IT SOLVED.™