Copeland Scroll™ Compressors
for air conditioning applications

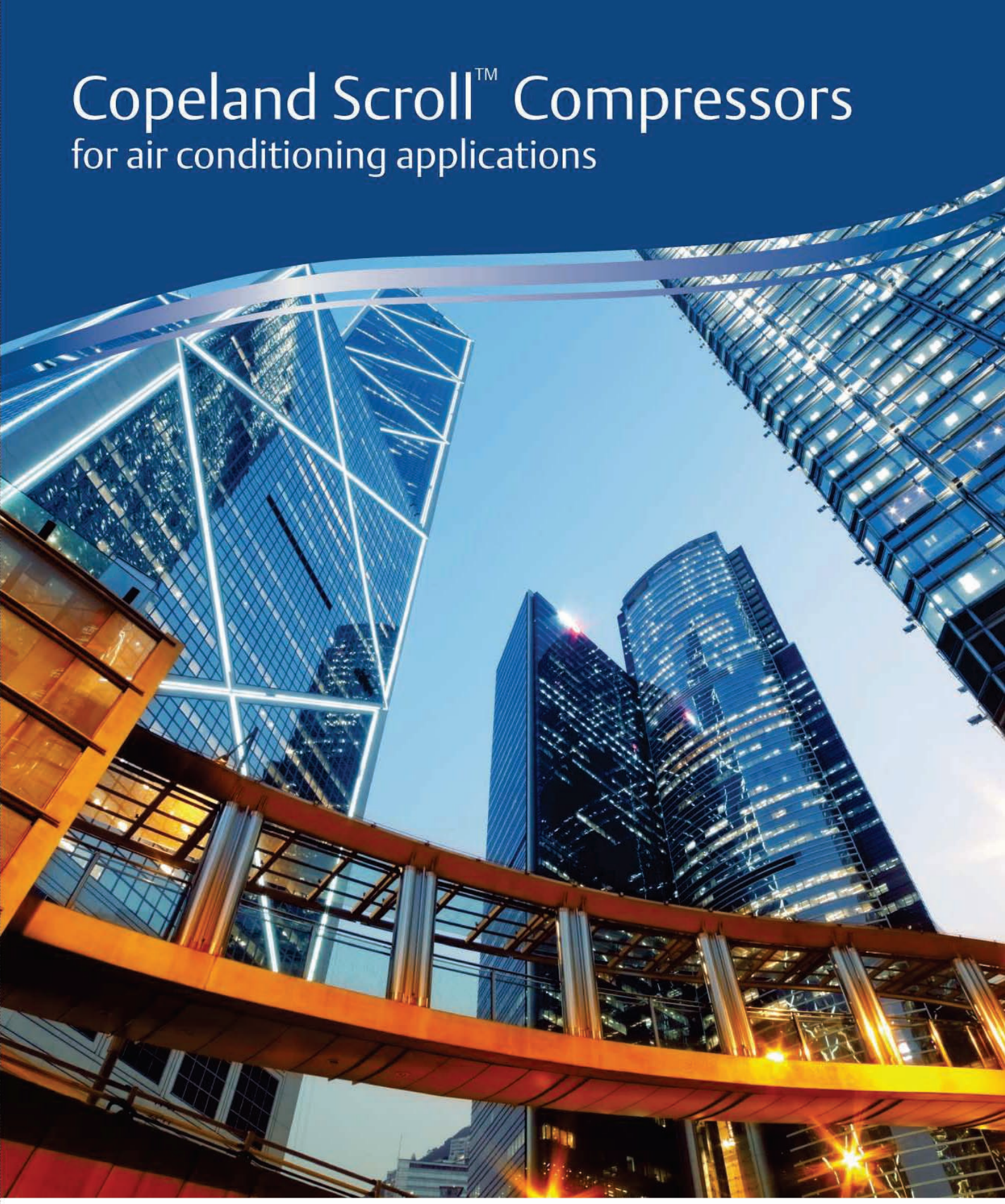

Copeland™ brand products

EMERSON™ Climate Technologies





Our Vision:

Emerson Climate Technologies, With Our Partners,
Will Provide Global Solutions To Improve Human Comfort,
Safeguard Food And Protect Our Environment.







Pioneering Technologies For Best-In-Class Products

Emerson Climate Technologies is the world's leading provider of heating, ventilation, air conditioning and refrigeration solutions for residential, commercial and industrial applications, supporting the industry with advanced technology, technical support and training services.

For more than 80 years, we have been introducing innovative technology to the market, from the first semi-hermetic and hermetic compressors in the 1940s and 1950s, the high efficiency Discus semi-hermetic, air conditioning and heating scroll compressors in the 1980s and 1990s, to the new Stream semi-hermetic and the digital scroll compressor technology of today.

Based on this, we have developed an unequalled range of solutions for the refrigeration and air conditioning markets. In recent years, we have become a major solution provider to the air conditioning and refrigeration industry. Our range of Copeland™ brand products addresses the diverse needs of all of these markets. With scrolls and semi-hermetic compressors available for all main refrigerants, equipped with smart electronics and capable of modulation, Emerson Climate Technologies has taken compression technology to new heights.



Residential
Air Conditioning



Heat Pump
Water Heating



Modulation
Applications



Commercial
Air Conditioning

Nomenclature

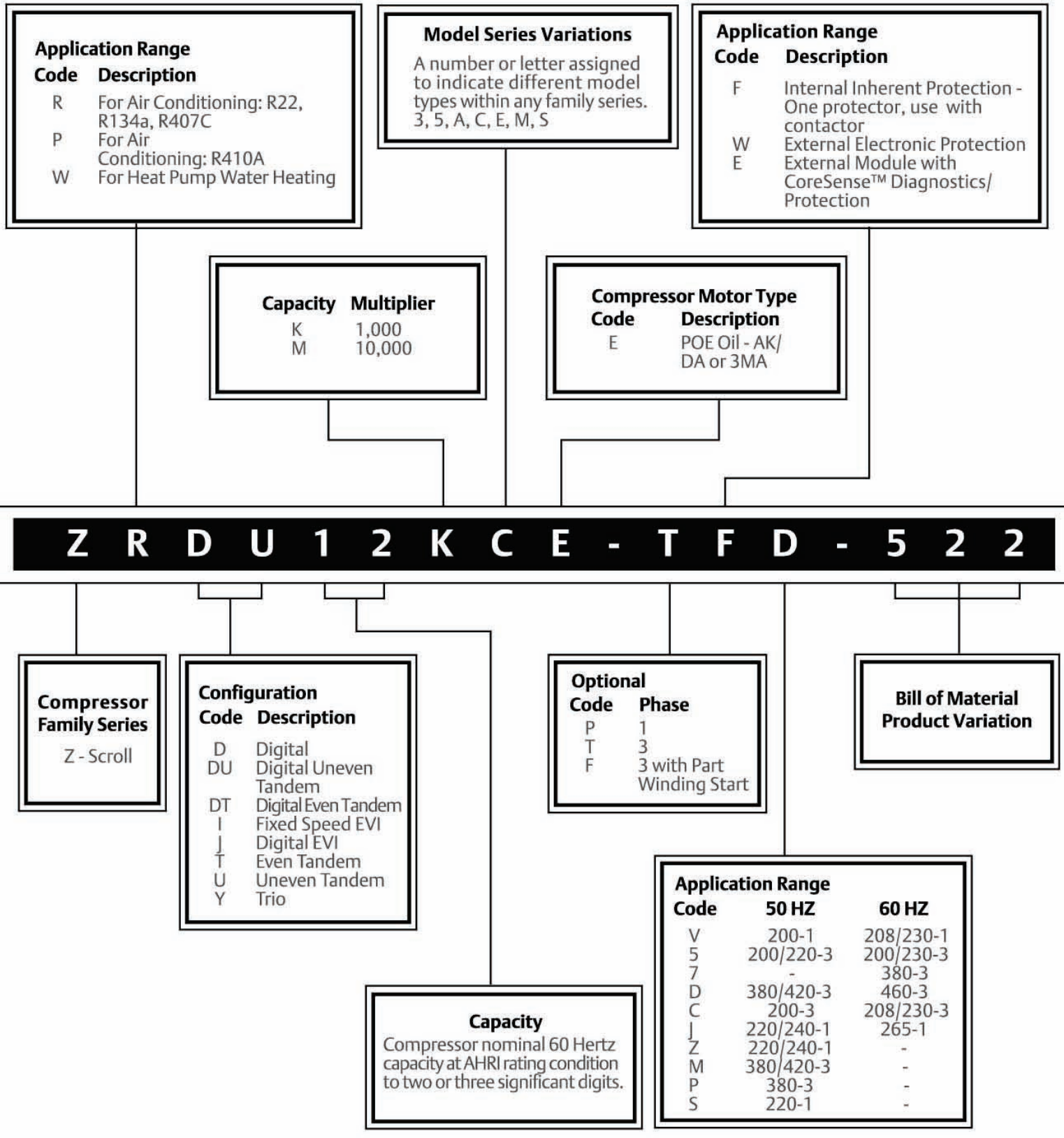

Table of Contents

Copeland Scroll™ Compressors — PAGE 06
for R22, R407C and R134a refrigerant

Copeland Scroll™ Compressors — PAGE 20
for R410A refrigerant

Copeland Scroll™ Digital Compressors — PAGE 26
for R22, R407C and R410A refrigerant

Copeland Scroll™ Compressors — PAGE 34
with Vapor Injection Technology

Copeland Scroll™ Compressors — PAGE 38
for Heat Pump Water Heating

Dimensional Drawings — PAGE 42

Bill of Material — PAGE 52

Copeland Scroll™ Compressors
for R22, R407C and R134a refrigerant



Copeland Scroll™ compressors for R22, R407C and R134a refrigerants are widely used in air conditioning, process cooling and precision cooling applications.

Applied in the air conditioning industry in diverse applications including split systems, rooftops, packaged units and chillers, scroll compressors are now the most used compression technology replacing reciprocating and screw compressors due to its undeniable superiority. Several, fully Copeland™ qualified, multiple compressor assemblies (tandem and trio) are available to be used in large capacity systems to deliver optimal comfort, low operating cost with higher seasonal efficiency.

The range of products goes from ZR18 (1.5HP) to ZR380 (30HP) in single compressor applications and to 60/90 HP in Tandem/trio applications in single module.



Features and Benefits

- Copeland Scroll™ axial and radial compliance for superior reliability and efficiency
- Wide scroll line-up
- Low oil circulation rate
- Superior liquid handling capability
- Low sound and vibration level
- Low Life Cycle Climate Performance (LCCP)
- Copeland™ qualified tandem and trio configurations for superior seasonal efficiency

Maximum Allowable Pressure (PS)

- ZR18 to ZR81:
  Low Side PS 20 bar(g) / High Side PS 29.5 bar(g)
- ZR84 to ZR380:
  Low Side PS 20 bar(g) / High Side PS 32 bar(g)

Operating Envelopes

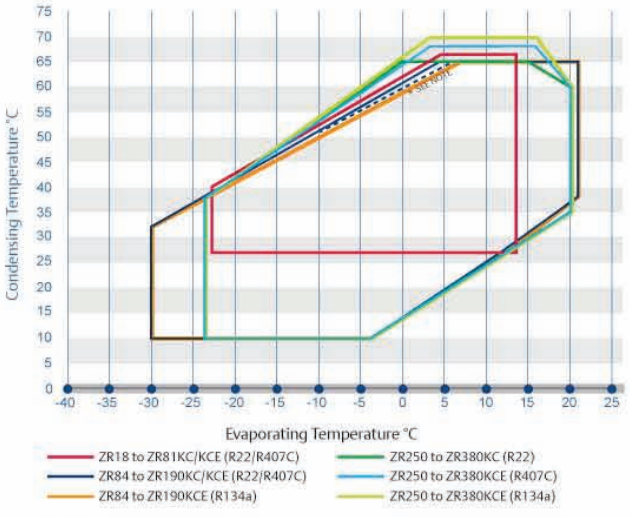

Note:
Dashed Blue Line indicates the reduced envelope for ZR144KCE (R407C)



Product Line-up

R22/R407C



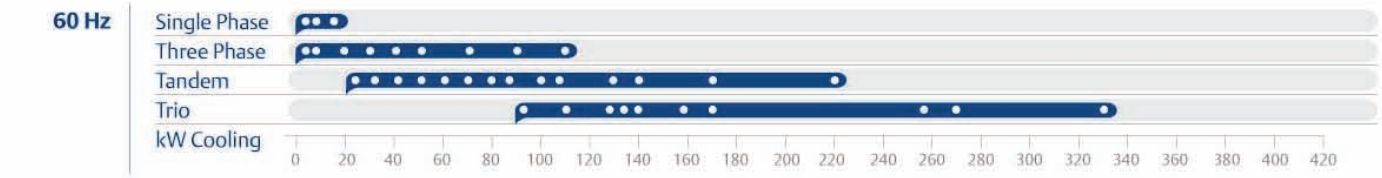

R134a

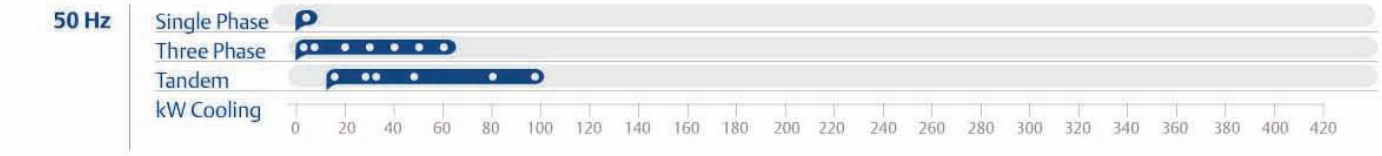

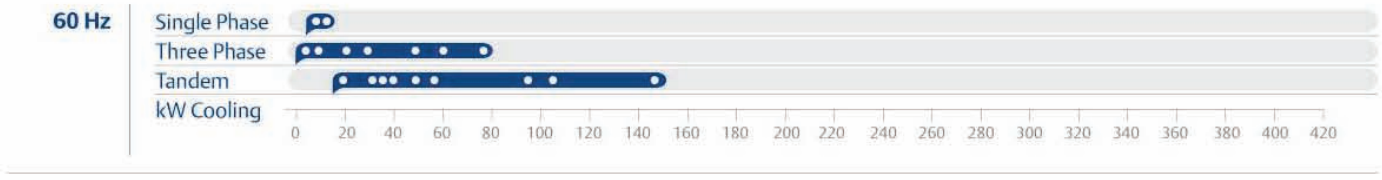

220-240V ; 50Hz , 1 Phase

Model	Nominal HP	Capacity		Input Power (W)	Current (A)	COP (W/W)	EER (Btu/ W h)	Displacement (cc/ Rev.)	Oil Quantity (l)	Net Weight (kg)	LRA (A)	Sound Power @ 1 m (dBA)
		(W)	(Btu/h)									
ZR22K3 PFJ	1.8	5,350	18,200	1,730	8.0	3.08	10.5	30.7	1.12	25.9	47.0	65.0
ZR24K3 PFJ	2.0	5,900	20,200	1,920	9.2	3.08	10.5	34.0	1.12	25.0	58.0	65.0
ZR26K3 PFJ	2.2	6,350	21,700	2,010	9.5	3.17	10.8	36.1	1.12	27.2	60.0	65.0
ZR28KM PFZ	2.3	6,750	23,000	2,020	9.2	3.34	11.4	37.2	0.77	19.4	52.9	63.0
ZR30KM PFZ	2.5	7,350	25,000	2,190	10.1	3.34	11.4	40.5	0.77	19.3	52.9	63.0
ZR30KS PFZ	2.5	7,350	25,000	2,230	10.2	3.28	11.2	41.0	0.74	22.1	60.0	68.0
ZR32KS PFZ	2.7	7,900	27,000	2,410	10.9	3.28	11.2	44.3	0.74	22.1	66.0	68.0
ZR34K3 PFJ	2.8	8,250	28,100	2,550	12.1	3.22	11.0	46.2	1.24	28.6	76.0	68.0
ZR36K3 PFJ	3.0	8,850	30,200	2,720	13.1	3.25	11.1	49.5	1.24	29.5	82.0	68.0
ZR40K3 PFJ	3.3	9,750	33,300	3,000	14.7	3.25	11.1	54.2	1.24	27.9	100.0	68.0
ZR42K3 PFJ	3.5	10,250	35,000	3,150	15.2	3.25	11.1	57.2	1.24	30.4	97.0	68.0
ZR45K3 PFJ	3.8	11,200	38,200	3,380	16.4	3.31	11.3	61.1	1.24	32.2	114.0	68.0
ZR47K3 PFJ	3.9	11,550	39,400	3,460	16.8	3.34	11.4	63.3	1.24	31.3	114.0	68.0
ZR48K3 PFJ	4.0	11,850	40,500	3,630	17.6	3.28	11.2	65.5	1.24	31.3	114.0	68.0
ZR61KC PFZ	5.1	14,950	51,000	4,550	21.7	3.28	11.2	82.6	1.66	42.6	150.0	71.0
ZR68KC PFJ	5.7	16,700	57,000	5,130	24.5	3.25	11.1	93.0	1.83	40.4	150.0	72.0

208-230V ; 60Hz , 1 Phase

Model	Nominal HP	Capacity		Input Power (W)	Current (A)	COP (W/W)	EER (Btu/ W h)	Displacement (cc/ Rev.)	Oil Quantity (l)	Net Weight (kg)	LRA (A)	Sound Power @ 1 m (dBA)
		(W)	(Btu/h)									
ZR18K5 PFV	1.5	5,300	18,000	1,705	7.8	3.09	10.6	25.2	0.74	22.2	55.0	68.0
ZR22K3 PFV	1.8	6,550	22,400	2,090	9.0	3.14	10.7	30.7	1.12	25.9	56.0	68.0
ZR24K3 PFV	2.0	7,200	24,500	2,230	10.3	3.22	11.0	34.0	1.12	26.3	61.0	68.0
ZR26K3 PFV	2.2	7,800	26,600	2,440	11.1	3.19	10.9	36.1	1.12	26.8	67.0	68.0
ZR28KM PFV	2.3	8,250	28,100	2,450	10.9	3.34	11.4	37.2	0.77	19.4	61.5	66.0
ZR28KC PFV	2.3	8,500	29,000	2,620	12.0	3.22	11.0	39.3	1.12	26.7	73.0	68.0
ZR30K3 PFV	2.5	9,100	31,100	2,800	12.6	3.25	11.1	42.0	1.24	28.1	73.0	68.0
ZR32K3 PFV	2.7	9,550	32,600	2,960	13.6	3.22	11.0	43.4	1.24	28.7	83.0	71.0
ZR34K3 PFV	2.8	10,100	34,400	3,060	14.1	3.28	11.2	46.2	1.24	28.5	88.0	71.0
ZR36K3 PFV	3.0	10,800	36,900	3,290	14.9	3.28	11.2	49.5	1.24	29.0	95.0	71.0
ZR40K3 PFV	3.3	11,900	40,600	3,630	16.8	3.28	11.2	54.2	1.24	29.7	104.0	71.0
ZR42K3 PFV	3.5	12,550	42,800	3,790	17.2	3.31	11.3	57.2	1.24	30.4	109.0	71.0
ZR47K3 PFV	3.9	14,150	48,200	4,190	18.2	3.37	11.5	63.3	1.24	31.3	137.0	71.0
ZR48K3 PFV	4.0	14,600	49,800	4,330	19.5	3.37	11.5	65.6	1.24	32.2	137.0	71.0
ZR54K3 PFV	4.5	16,100	55,000	4,830	21.4	3.34	11.4	73.2	1.66	43.1	148.0	74.0
ZR57K3 PFV	4.8	17,000	58,000	5,040	23.6	3.37	11.5	77.2	1.66	40.8	148.0	74.0
ZR61K3 PFV	5.1	18,200	62,000	5,450	24.8	3.34	11.4	82.6	1.66	40.8	148.0	74.0
ZR68KC PFV	5.7	20,400	69,500	6,200	28.0	3.28	11.2	93.0	1.77	40.4	176.0	74.0

380-420V ; 50Hz , 3 Phase

Model	Nominal HP	Capacity		Input Power (W)	Current (A)	COP (W/W)	EER (Btu/ W h)	Displacement (cc/ Rev.)	Oil Quantity (l)	Net Weight (kg)	LRA (A)	Sound Power @ 1 m (dBA)
		(W)	(Btu/h)									
ZR22K3 TFD	1.8	5,350	18,200	1,770	3.2	3.02	10.3	30.7	1.12	24.5	24.0	65.0
ZR24K3 TFD	2.0	5,900	20,200	1,920	3.5	3.08	10.5	34.0	1.12	25.0	26.0	65.0
ZR26K3 TFD	2.2	6,350	21,700	2,010	3.8	3.17	10.8	36.1	1.12	26.8	26.0	65.0
ZR28K3 TFD	2.3	6,900	23,600	2,150	4.0	3.22	11.0	39.3	1.12	25.4	32.0	65.0
ZR30K3 TFD	2.5	7,400	25,200	2,290	4.2	3.22	11.0	42.0	1.24	25.9	32.0	65.0
ZR32K3 TFD	2.7	7,750	26,500	2,430	4.4	3.19	10.9	43.4	1.24	26.3	35.0	68.0
ZR34K3 TFD	2.8	8,250	28,100	2,500	4.6	3.28	11.2	46.2	1.24	26.9	40.0	68.0
ZR36K3 TFD	3.0	8,850	30,200	2,700	4.8	3.28	11.2	49.5	1.24	27.2	40.0	68.0
ZR40K3 TFD	3.3	9,750	33,300	2,970	5.3	3.28	11.2	54.2	1.24	28.1	46.0	68.0
ZR42K3 TFD	3.5	10,250	35,000	3,110	5.5	3.31	11.3	57.2	1.24	28.2	46.0	68.0
ZR44K5 TFD	3.7	10,600	36,100	3,280	5.4	3.22	11.0	58.4	1.24	28.9	41.0	70.0
ZR45KC TFD	3.8	11,100	37,900	3,320	6.1	3.34	11.4	61.1	1.36	28.1	48.0	68.0
ZR47KC TFD	3.9	11,550	39,400	3,430	6.3	3.37	11.5	64.2	1.36	28.1	48.0	68.0
ZR48KC TFD	4.0	11,850	40,500	3,600	6.1	3.28	11.2	65.5	1.36	28.1	50.0	68.0
ZR54KE TFD	4.5	13,200	45,000	3,920	7.4	3.37	11.5	73.1	1.36	29.9	71.3	69.0
ZR54KS TFD	4.5	13,200	45,000	3,920	7.1	3.37	11.5	73.1	1.24	29.9	56.0	69.0
ZR57KE TFD	4.8	13,900	47,500	4,130	7.8	3.37	11.5	77.2	1.36	28.6	71.3	69.0
ZR57KS TFD	4.8	14,050	48,000	4,170	7.5	3.37	11.5	77.2	1.24	30.0	56.0	69.0
ZR61KE TFP	5.1	14,950	51,000	4,470	8.3	3.34	11.4	82.6	1.36	29.9	58.0	69.0
ZR61KS TFD	5.1	14,950	51,000	4,430	7.9	3.37	11.5	82.6	1.24	29.9	59.0	69.0
ZR68KC TFD	5.7	16,900	57,500	4,960	8.6	3.40	11.6	93.0	1.77	39.0	74.0	72.0
ZR72KC TFD	6.0	17,700	60,500	5,200	8.9	3.43	11.7	98.1	1.77	38.6	74.0	72.0
ZR81KC TFD	6.8	19,900	68,000	5,810	10.5	3.43	11.7	107.8	1.77	39.0	101.0	72.0
ZR84KC TFD	7.0	20,800	71,000	6,000	11.4	3.46	11.8	113.6	2.51	57.2	100.0	74.0
ZR94KC TFD	7.8	23,300	79,500	6,750	12.5	3.46	11.8	127.2	2.51	57.2	95.0	73.0
ZR108KC TFD	9.0	26,400	90,000	7,550	13.7	3.52	12.0	142.9	3.25	59.9	111.0	74.0
ZR125KC TFD	10.4	31,000	106,000	9,000	15.8	3.46	11.8	167.2	3.25	61.2	118.0	75.0
ZR144KC TFD	12.0	35,000	120,000	10,100	17.6	3.49	11.9	190.9	3.25	61.2	118.0	76.0
ZR160KC TFD TWD	13.3	38,000	130,000	11,300	20.3	3.37	11.5	209.1	3.25	64.9	140.0	79.0
ZR190KC TFD TWD	15.8	45,500	155,000	13,600	25.6	3.34	11.4	249.2	3.25	66.2	174.0 173.0	82.0
ZR250KC TWD	20.8	60,000	204,000	17,700	29.6	3.37	11.5	325.2	4.67	139.3	225.0	83.0
ZR310KC TWD	25.8	74,000	253,000	22,000	37.9	3.37	11.5	410.6	6.80	160.1	272.0	85.0
ZR380KC TWD	31.7	92,500	315,000	26,500	45.1	3.49	11.9	502.7	6.30	176.9	310.0	88.0

Note:
All Values As Per AHRI Standards : Evaporating Temp. : 7.2°C , Condensing Temp. : 54.4°C , Subcooling : 8.3K , Superheat : 11.1K , Ambient Temp. : 35°C

460V / 200-230V / 380V ; 60 Hz , 3 Phase

Model		Nominal HP	Capacity (W)	Capacity (Btu/h)	Input Power (W)	Current (A)	COP (W/W)	EER (Btu/ W h)	Displacement (cc/ Rev.)	Oil Quantity (l)	Net Weight (kg)	LRA (A)	Sound Power @ 1 m (dBA)
ZR22K3	TFD TF5	1.8	6,500	22,100	2,090 2,080	3.2 6.0	3.11 3.14	10.6 10.7	30.7	1.12	24.5	22.4 45.0	68.0
ZR24K3	TFD TF5	2.0	7,250	24,800	2,310	3.5 7.0	3.14	10.7	34.0	1.12	25.0	27.0 55.0	68.0
ZR26K3	TFD TF5	2.2	7,700 7,750	26,200 26,500	2,430 2,450	3.8 7.0	3.17	10.8	36.1	1.12	26.8	27.0 55.0	68.0
ZR28K3	TFD TF5	2.3	8,450	28,900	2,630	4.0 7.9	3.22	11.0	39.3	1.12	25.4	31.0 63.0	68.0
ZR30K3	TFD TF5	2.5	9,100	31,100	2,830	4.2 8.3	3.22	11.0	42.0	1.24	25.9	31.0 63.0	68.0
ZR32K3	TFD TF5	2.7	9,550	32,600	2,910	4.4 8.7	3.28	11.2	43.4	1.24	26.3	35.0 77.0	71.0
ZR34K3	TFD TF5 TF7	2.8	9,950	34,000	2,970 2,970 3,200	4.6 9.1 5.4	3.34 3.34 3.11	11.4 11.4 10.6	46.2	1.24	26.9 26.9 31.3	39.0 77.0 39.0	71.0
ZR36K3	TFD TF5	3.0	10,800	36,900	3,250	4.9 9.7	3.31	11.3	49.5	1.24	27.2 27.3	39.0 77.0	71.0
ZR40K3	TFD TF5	3.3	11,900	40,600	3,560	5.4 10.7	3.34	11.4	54.2	1.24	28.1 27.9	44.0 88.0	71.0
ZR42K5	TFD TF5	3.5	12,350	42,200	3,750	5.7 11.3	3.30	11.3	56.5	1.24	27.6 27.7	48.0 93.0	73.0
ZR45KC	TFD TF5	3.8	13,500	46,000	4,000	6.1 12.1	3.37	11.5	61.1	1.36	28.1	46.0 91.0	71.0
ZR47KC	TFD TF5 TF7	3.9	13,900	47,500	4,130	6.1 12.2 7.4	3.37	11.5	64.2 64.2 63.4	1.36	28.1	46.0 91.0 54.0	71.0
ZR48KC	TFD TF5 TF7	4.0	14,400	49,100	4,270	6.3 12.6 7.6	3.37	11.5	65.5	1.36	28.1	50.0 91.0 54.0	71.0
ZR54KE	TFD	4.5	16,100	55,000	4,780	7.6	3.37	11.5	73.1	1.36	29.9	74.8	72.0
ZR54KS	TFD TF5 TF7	4.5	16,000	54,500	4,670 4,670 4,700	7.2 14.3 8.3	3.40	11.6	73.1	1.24	29.9	59.0 125.0 65.0	72.0
ZR54K5	TFD TF5 TF7	4.5	15,700	53,500	4,740 4,740 4,730	6.8 13.6 7.9	3.31	11.3	72.0	1.24	31.0	52.0 114.0 65.0	73.0
ZR57KE	TFD	4.8	17,100	58,400	5,040	8.0	3.40	11.6	77.2	1.36	28.6	74.8	72.0
ZR57KS	TFD TF5 TF7	4.8	17,100	58,500	5,050 5,050 5,100	7.5 15.0 8.9	3.40 3.40 3.37	11.6 11.6 11.5	77.2	1.24	29.9	59.0 125.0 65.0	72.0
ZR61KS	TFD TF5 TF7	5.1	18,200	62,000	5,350	7.9 15.8 9.2	3.40	11.6	82.6	1.24	29.9	56.0 125.0 65.0	72.0
ZR68KC	TFD TF5 TF7	5.7	20,500	70,000	5,950	8.8 17.5 10.1	3.46	11.8	93.0	1.77	39.0	75.0 156.0 70.0	75.0
ZR72KC	TFD TF5 TF7	6.0	21,500	73,500	6,250	9.1 18.2 10.5	3.43	11.7	98.1	1.77	38.6	75.0 156.0 70.0	75.0
ZR81KC	TFD TF5 TF7	6.8	24,000	82,000	6,950	11.0 20.8 11.8	3.46	11.8	107.8	1.77	39.0	100.0 164.0 100.0	75.0
ZR84KC	TFD TF5 TF7	7.0	25,100	85,500	7,300	11.4 22.8 13.8	3.46	11.8	113.6	2.51	57.2	100.0 196.0 135.0	78.0
ZR94KC	TFD TF5 TF7	7.8	28,300	96,500	8,200	12.8 24.9 15.1	3.46	11.8	127.2	2.51	57.2 56.7 57.2	95.0 195.0 123.0	78.0
ZR108KC	TFD TF5 TF7	9.0	32,000	109,000	9,200	14.1 28.2 17.1	3.49	11.9	142.9	3.25	59.9 59.9 60.3	114.0 225.0 140.0	80.0
ZR125KC	TFD TF5 TF7	10.4	37,500	128,000	10,900	16.3 32.6 19.7	3.43	11.7	167.2	3.25	61.2	125.0 239.0 145.0	80.0
ZR144KC	TFD TF5 TF7	12.0	43,000	146,000	12,300	18.2 38.3 22.5	3.46	11.8	190.9	3.25	61.2	125.0 245.0 145.0	80.0
ZR160KC	TFD TF7	13.3	47,000 45,500	160,000 155,000	13,900	20.8 24.2	3.37 3.28	11.5 11.2	209.1	3.25	64.9	150.0 138.0	83.0
ZR160KC	TWD TW5 TW7	13.3	47,000	160,000	13,900	20.8 43.2 24.2	3.37	11.5	209.1	3.25	64.9 66.2 64.9	150.0 300.0 139.0	83.0

Continuation
460V / 200-230V / 380V ; 60 Hz , 3 Phase

Model	Nominal HP	Capacity		Input Power (W)	Current (A)	COP (W/W)	EER (Btu/ W h)	Displacement (cc/ Rev.)	Oil Quantity (l)	Net Weight (kg)	LRA (A)	Sound Power @ 1 m (dBA)
		(W)	(Btu/h)									
ZR190KC TFD	15.8	55,500	190,000	16,800	26.5	3.34	11.4	249.2	3.25	66.2	179.0	83.0
ZR190KC TWD	15.8	55,500	190,000	16,800	26.5	3.34	11.4	249.2	3.25	66.2	173.0	83.0
ZR190KC TW5					53.2						340.0	
ZR190KC TW7					32.0						196.0	
ZR250KC TWD	20.8	73,500	250,000	21,700	30.5	3.37	11.5	325.2	4.67	139.3	225.0	88.0
ZR250KC TWC					66.6			325.2		138.8	505.0	
ZR250KC TW7					36.9			318.1		139.3	280.0	
ZR310KC TWD	25.8	89,500	306,000	27,100	38.8	3.31	11.3	410.6	6.80	160.1	272.0	90.0
ZR310KC TWC					81.6						605.0	
ZR310KC TW7					47.0						353.0	
ZR380KC TWD	31.7	111,000	379,000	32,700	47.1	3.40	11.6	502.7	6.30	176.9	310.0	92.0
ZR380KC TWC					94.2						599.0	
ZR380KC TW7					57.0						358.0	

Note:
All Values As Per AHRI Standards : Evaporating Temp. : 7.2°C , Condensing Temp. : 54.4°C , Subcooling : 8.3K , Superheat : 11.1K , Ambient Temp. : 35°C

Tandem and Trio Model Availability

Model	Nominal HP	Configuration	Capacity (W)				Even Tandem	Uneven Tandem	Trio
			50 Hz / 3 Ph	60 Hz / 3 Ph					
			380 / 420V	460V	200 / 230V	380V			
ZRT90KC	7.5	ZR45KC + ZR45KC	21,863	26,600	26,600	-	•		
ZRT96K3	8.0	ZR48K3 + ZR48K3	23,400	28,200	28,400	-	•		
ZRT108K3	9.0	ZR54K3 + ZR54K3	26,200	31,500	31,000	-	•		
ZRT114K3	9.5	ZR57K3 + ZR57K3	28,000	33,500	33,500	-	•		
ZRT122K3	10.2	ZR61K3 + ZR61K3	29,600	35,500	35,500	-	•		
ZRT136KC	11.3	ZR68KC + ZR68KC	33,500	40,000	40,000	40,000	•		
ZRU140KC	11.7	ZR68KC + ZR72KC	34,500	41,500	41,500	41,500		•	
ZRT144KC	12.0	ZR72KC + ZR72KC	34,500	42,000	42,000	42,000	•		
ZRT162KC	13.5	ZR81KC + ZR81KC	39,500	48,000	48,000	48,000	•		
ZRT168KC	14.0	ZR84KC + ZR84KC	41,500	50,000	50,000	50,000	•		
ZRU178KC	15.0	ZR84KC + ZR94KC	44,000	53,000	53,000	53,000		•	
ZRT188KC	16.0	ZR94KC + ZR94KC	46,000	56,100	56,100	56,100	•		
ZRT216KC	18.0	ZR108KC + ZR108KC	52,000	63,000	63,000	63,000	•		
ZRT250KC	21.0	ZR125KC + ZR125KC	61,500	74,000	74,000	74,000	•		
ZRU285KC	24.0	ZR125KC + ZR160KC	68,000	82,500	82,500	82,500		•	
ZRT288KC	24.0	ZR144KC + ZR144KC	70,000	84,500	84,500	84,500	•		
ZRU315KC	26.0	ZR125KC + ZR190KC	75,000	91,000	91,000	91,000		•	
ZRT320KC	27.0	ZR160KC + ZR160KC	76,000	93,500	93,500	93,500	•		
ZRU334KC	28.0	ZR144KC + ZR190KC	79,000	96,500	96,500	96,500		•	
ZRY375KC	31.0	ZR125KC + ZR125KC + ZR125KC	93,000	112,000	112,000	112,000			•
ZRT380KC	32.0	ZR190KC + ZR190KC	90,500	110,000	110,000	110,000	•		
ZRY432KC	36.0	ZR144KC + ZR144KC +ZR144KC	105,000	127,500	127,500	127,500			•
ZRY480KC	40.0	ZR160KC + ZR160KC + ZR160KC	114,000	140,000	140,000	140,000			•
ZRT500KC	42.0	ZR250KC + ZR250KC	116,000	141,500	141,500	141,500	•		
ZRY570KC	47.5	ZR190KC + ZR190KC +ZR190KC	135,500	167,000	167,000	167,000			•
ZRT600KC	50.0	ZR300KC + ZR300KC	140,000	171,500	171,500	171,500	•		
ZRT760KC	63.0	ZR380KC + ZR380KC	181,000	219,000	219,000	219,000	•		
ZRY900KC	75.0	ZR300KC + ZR300KC +ZR300KC	210,000	258,000	258,000	258,000			•
ZRY930KC	77.5	ZR310KC + ZR310KC + ZR310KC	221,000	267,000	267,000	-			•
ZRY114MC	99.0	ZR380KC + ZR380KC + ZR380KC	275,500	332,500	332,500	332,500			•

Note:
Tandem / Trio assemblies by system manufacturers. Contact Application Engineering for more information.

220-240V ; 50Hz , 1 Phase

Model	Nominal HP	Capacity		Input Power (W)	Current (A)	COP (W/W)	EER (Btu/ W h)	Displacement (cc/ Rev.)	Oil Quantity (l)	Net Weight (kg)	LRA (A)	Sound Power @ 1 m (dBA)
		(W)	(Btu/h)									
ZR18K5E PFJ	1.5	4,200	14,400	1,455	6.8	2.9	9.9	25.2	0.74	22.4	45.0	65.0
ZR22K3E PFJ	1.8	5,100	17,400	1,740	8.1	2.93	10.0	30.7	1.12	25.9	47.0	65.0
ZR24K3E PFJ	2.0	5,700	19,400	1,940	9.2	2.93	10.0	34.0	1.12	25.0	58.0	65.0
ZR26K3E PFJ	2.2	6,050	20,600	2,010	9.6	2.99	10.2	36.1	1.12	27.2	60.0	65.0
ZR28K3E PFJ	2.3	6,650	22,700	2,190	10.4	3.02	10.3	39.3	1.12	27.2	61.0	65.0
ZR30K3E PFJ	2.5	7,100	24,300	2,330	11.2	3.05	10.4	42.0	1.24	28.1	74.0	65.0
ZR34K3E PFJ	2.8	7,900	27,000	2,580	12.3	3.05	10.4	46.2	1.24	28.6	76.0	68.0
ZR36K3E PFJ	3.0	8,450	28,800	2,740	13.1	3.08	10.5	49.5	1.24	29.5	82.0	68.0
ZR40K3E PFJ	3.3	9,300	31,800	3,040	14.3	3.08	10.5	54.2	1.24	28.0	100.0	68.0
ZR42K3E PFJ	3.5	9,750	33,200	3,150	15.2	3.11	10.6	57.2	1.24	30.4	97.0	68.0
ZR45K3E PFJ	3.8	10,400	35,500	3,360	16.6	3.11	10.6	61.1	1.24	32.2	114.0	68.0
ZR47K3E PFJ	3.9	10,950	37,400	3,480	16.9	3.14	10.7	63.3	1.24	31.3	114.0	68.0
ZR48K3E PFJ	4.0	11,400	38,900	3,610	17.3	3.17	10.8	65.5	1.24	31.3	114.0	68.0
ZR68KCE PFJ	5.7	15,700	53,500	5,200	25.1	3.02	10.3	93.0	1.83	40.4	150.0	72.0

208-230V ; 60Hz , 1 Phase

Model	Nominal HP	Capacity		Input Power (W)	Current (A)	COP (W/W)	EER (Btu/ W h)	Displacement (cc/ Rev.)	Oil Quantity (l)	Net Weight (kg)	LRA (A)	Sound Power @ 1 m (dBA)
		(W)	(Btu/h)									
ZR18K5E PFV	1.5	5,050	17,300	1,750	7.6	2.89	9.9	25.2	0.74	22.2	55.0	68.0
ZR21K5E PFV	1.8	5,900	20,200	2,040	8.7	2.90	9.9	29.0	0.74	21.3	56.0	68.0
ZR24K3E PFV	2.0	6,850	23,400	2,260	10.2	3.02	10.3	34.0	1.12	26.3	61.0	68.0
ZR28K3E PFV	2.3	7,950	27,200	2,600	11.7	3.08	10.5	39.3	1.12	26.7	72.5	68.0
ZR30K3E PFV	2.5	8,550	29,200	2,760	12.4	3.11	10.6	42.0	1.24	28.1	73.0	68.0
ZR34K3E PFV	2.8	9,550	32,600	3,060	13.8	3.11	10.6	46.2	1.24	28.5	88.0	71.0
ZR36K3E PFV	3.0	10,250	34,900	3,260	14.9	3.14	10.7	49.5	1.24	29.0	95.0	71.0
ZR40K3E PFV	3.3	11,300	38,500	3,580	16.6	3.17	10.8	54.2	1.24	29.7	104.0	71.0
ZR48K3E PFV	4.0	13,850	47,200	4,410	20.3	3.14	10.7	65.6	1.24	32.2	137.0	71.0
ZR61KCE PFV	5.1	17,700	60,050	5,300	24.8	3.34	11.4	82.6	1.66	39.5	144.0	74.0
ZR68KCE PFV	5.7	19,000	65,000	6,050	27.5	3.14	10.7	93.0	1.77	40.4	176.0	75.0

Note:
All Values As Per AHRI Standards : Evaporating Temp. : 7.2°C , Condensing Temp. : 54.4°C , Subcooling : 8.3K , Superheat : 11.1K , Ambient Temp. : 35°C

380-420V ; 50Hz , 3 Phase

Model	Nominal HP	Capacity (W)	Capacity (Btu/h)	Input Power (W)	Current (A)	COP (W/W)	EER (Btu/ W h)	Displacement (cc/ Rev.)	Oil Quantity (l)	Net Weight (kg)	LRA (A)	Sound Power @ 1 m (dBA)
ZR22K3E TFD	1.8	5,150	17,500	1,670	3.1	3.08	10.5	30.7	1.12	24.6	24.0	65.0
ZR24K3E TFD	2.0	5,700	19,400	1,920	3.7	2.96	10.1	34.0	1.12	25.0	26.0	65.0
ZR26K3E TFD	2.2	6,400	21,800	2,190	4.1	2.93	10.0	36.1	1.12	26.8	26.0	65.0
ZR28K3E TFD	2.3	6,650	22,700	2,140	3.9	3.11	10.6	39.3	1.12	25.4	32.0	65.0
ZR30K3E TFD	2.5	7,400	25,200	2,270	4.4	3.25	11.1	42.0	1.24	25.9	32.0	65.0
ZR32K3E TFD	2.7	7,400	25,200	2,410	7.6	3.05	10.4	43.4	1.24	26.3	35.0	68.0
ZR34K3E TFD	2.8	7,900	27,000	2,530	4.7	3.14	10.7	46.2	1.24	26.9	40.0	68.0
ZR36K3E TFD	3.0	8,450	28,800	2,700	4.8	3.14	10.7	49.5	1.24	27.2	40.0	68.0
ZR38K5E TFD	3.2	8,800	30,000	2,900	5.4	3.03	10.4	50.9	1.24	27.5	47.0	70.0
ZR40K3E TFD	3.3	9,300	31,700	2,960	5.4	3.14	10.7	54.2	1.24	28.1	46.0	68.0
ZR42K3E TFD	3.5	9,750	33,300	3,110	5.3	3.14	10.7	57.2	1.24	28.2	46.0	68.0
ZR45KCE TFD	3.8	10,500	35,800	3,340	6.1	3.14	10.7	61.1	1.36	28.1	48.0	68.0
ZR47KCE TFD	3.9	10,950	37,400	3,440	6.5	3.19	10.9	64.2	1.36	28.1	48.0	71.0
ZR48KCE TFD	4.0	11,300	38,600	3,590	6.3	3.14	10.7	65.5	1.36	28.1	50.0	71.0
ZR48K5E TFD	4.0	11,200	38,300	3,450	6.2	3.25	11.1	63.4	1.24	29.1	60.0	70.0
ZR49K3E TFD	4.1	11,350	38,800	3,670	6.4	3.11	10.6	67.1	1.95	37.2	51.5	69.0
ZR54KSE TFD	4.5	13,350	45,600	4,190	7.4	3.19	10.9	73.1	1.24	29.9	56.0	69.0
ZR54K5E TFD	4.5	12,500	42,700	3,880	6.6	3.22	11.0	72.0	1.24	31.0	52.0	70.0
ZR57KSE TFD	4.8	14,250	48,700	4,450	7.8	3.19	10.9	77.2	1.24	30.0	56.0	72.0
ZR61KSE TFD	5.1	15,200	52,000	4,760	8.2	3.22	11.0	82.6	1.24	29.9	59.0	72.0
ZR61KHE TFM	5.1	14,350	48,900	4,470	8.0	3.19	10.9	82.6	1.77	39.5	67.0	72.0
ZR68KCE TFD	5.7	15,800	54,000	5,100	8.9	3.11	10.6	93.0	1.77	39.0	74.0	72.0
ZR72KCE TFD	6.0	16,600	56,500	5,150	9.1	3.22	11.0	98.1	1.77	38.6	74.0	72.0
ZR81KCE TFD	6.8	18,600	63,500	5,900	10.9	3.17	10.8	107.8	1.77	39.0	101.0	72.0
ZR84KCE TFD	7.0	19,600	67,000	6,150	11.4	3.19	10.9	113.6	2.51	57.2	100.0	79.0
ZR94KCE TFD	7.8	23,000	78,600	6,950	12.9	3.34	11.4	127.2	2.51	57.2	95.0	74.0
ZR108KCE TFD	9.0	25,800	88,100	7,580	13.8	3.40	11.6	142.9	3.25	59.9	111.0	74.0
ZR125KCE TFD	10.4	30,000	103,000	8,950	16.0	3.40	11.6	167.2	3.25	61.2	118.0	74.0
ZR144KCE TFD	12.0	34,500	118,000	10,150	17.7	3.40	11.6	190.9	3.25	61.2	118.0	75.0
ZR160KCE TFD TWD	13.3	37,500	128,000	11,450	20.5	3.28	11.2	209.1	3.25	64.9	140.0	78.0
ZR190KCE TFD TWD	15.8	44,000	150,000	13,650	26.5	3.22	11.0	249.2	3.25	66.2	174.0 173.0	82.0
ZR250KCE TWD	20.8	58,500	200,000	18,000	30.1	3.25	11.1	325.2	4.67	139.3	225.0	83.0
ZR310KCE TWD	25.8	72,500	248,000	22,300	37.9	3.25	11.1	410.6	6.80	160.1	272.0	85.0
ZR380KCE TWD	31.7	91,500	313,000	26,700	45.5	3.43	11.7	502.7	6.30	176.9	310.0	88.0

460V / 200-230V / 380V / 208-230V ; 60Hz , 3 Phase

Model	Nominal HP	Capacity (W)	Capacity (Btu/h)	Input Power (W)	Current (A)	COP (W/W)	EER (Btu/ W h)	Displacement (cc/ Rev.)	Oil Quantity (l)	Net Weight (kg)	LRA (A)	Sound Power @ 1 m (dBA)
ZR22K3E TFD TF5	1.8	6,100 6,200	20,800 21,100	2,110 2,090	3.3 8.9	2.87 2.96	9.8 10.1	30.7	1.12	24.5	22.4 45.0	68.0
ZR24K3E TFD TF5	2.0	7,200 6,900	24,600 23,500	2,240 2,190	1.7 7.2	3.22 3.14	11.0 10.7	34.0	1.12	25.0	27.0 55.0	68.0
ZR26K3E TFD TF5	2.2	7,750 7,700	26,400 26,200	2,470 2,490	3.7 7.0	3.14 3.08	10.7 10.5	36.1	1.12	26.8	27.0 55.0	68.0
ZR28K3E TFD TF5	2.3	8,000	27,300	2,530	3.9 7.8	3.17	10.8	39.3	1.12	25.4	31.0 63.0	68.0
ZR30K3E TFD TF5	2.5	8,500	29,000	2,750	4.3 8.5	3.08	10.5	42.0	1.24	25.9	31.0 63.0	68.0
ZR32K3E TFD TF5	2.7	9,000	30,700	2,850	4.4 8.7	3.17	10.8	43.4	1.24	26.3	35.0 77.0	71.0
ZR34K3E TFD TF5 TF7	2.8	9,650	33,000	3,010 3,010 3,320	4.6 9.2 5.4	3.22 3.22 2.90	11.0 11.0 9.9	46.2	1.24	26.9 26.9 31.3	39.0 77.0 39.0	71.0

Continuation
460V / 200-230V / 380V / 208-230V ; 60Hz , 3 Phase

Model		Nominal HP	Capacity		Input Power (W)	Current (A)	COP (W/W)	EER (Btu/ W h)	Displacement (cc/ Rev.)	Oil Quantity (l)	Net Weight (kg)	LRA (A)	Sound Power @ 1 m (dBA)
			(W)	(Btu/h)									
ZR36K3E	TFD TF5	3.0	10,250	34,900	3,180	4.9 9.7	3.22	11.0	49.5	1.24	27.2 27.3	39.0 77.0	71.0
ZR40K3E	TFD TF5	3.3	11,200	38,300	3,490	5.4 10.7	3.22	11.0	54.2	1.24	28.1 27.9	44.0 88.0	71.0
ZR42K3E	TFD TF5	3.5	11,800	40,200	3,730	5.5 11.0	3.17	10.8	57.2	1.24	28.2 28.1	44.0 88.0	71.0
ZR47KCE	TFD TF5	3.9	13,050	44,600	4,150	6.2 12.4	3.14	10.7	64.2	1.36	28.1	46.0 91.0	71.0
ZR48KCE	TFD TF5 TF7	4.0	13,750	47,000	4,330	6.3 12.6 7.6	3.19	10.9	65.5	1.36	28.1	50.0 91.0 54.0	71.0 75.0 71.0
ZR54KCE	TF7	4.5	15,800	54,000	4,880	9.0	3.25	11.1	73.2	1.95	37.2	65.8	74.0
ZR54KSE	TFD TF5	4.5	16,100	55,000	5,050 4,970	7.6 14.7	3.19 3.25	10.9 11.1	73.1	1.24	29.9	59.0 125.0	72.0
ZR57KSE	TFD TF5	4.8	17,100	58,500	5,350	8.0 15.7	3.19	10.9	77.2	1.24	29.9	59.0 125.0	75.0 72.0
ZR61KCE	TF7	5.1	17,100	58,500	5,300	9.2	3.25	11.1	82.6	1.95	36.3	64.0	74.0
ZR61KSE	TFD TF5	5.1	17,400 18,300	59,500 62,500	5,450 5,750	8.0 16.5	3.22 3.19	11.0 10.9	82.6	1.24	29.9	56.0 125.0	75.0 72.0
ZR68KCE	TFD TF5	5.7	19,200	65,500	6,000	9.2 18.4	3.19	10.9	93.0	1.77	39.0	75.0 156.0	75.0
ZR72KCE	TFD TF5 TF7	6.0	20,400	69,500	6,200	8.8 18.1 10.7	3.28	11.2	98.1	1.77	38.6 38.6 38.6	75.0 156.0 70.0	75.0
ZR81KCE	TFD TF5 TF7	6.8	22,600	77,000	7,150	11.0 21.9 13.3	3.17	10.8	107.8	1.77	39.0	100.0 164.0 100.0	75.0
ZR84KCE	TFD TF5 TF7	7.0	23,900	81,500	7,300	11.6 23.2 14.0	3.28	11.2	113.6	2.51	57.2	100.0 196.0 135.0	82.0
ZR94KCE	TFD TF5 TF7	7.8	27,500	94,000	8,310	12.8 25.6 15.5	3.34	11.4	127.2	2.51	57.2 56.7 57.2	95.0 195.0 123.0	79.0
ZR108KCE	TFD TF5 TF7	9.0	31,000	106,000	9,220	14.0 28.0 17.0	3.37	11.5	142.9	3.25	59.9 59.9 60.3	114.0 225.0 140.0	80.0
ZR125KCE	TFD TF5 TF7	10.4	36,500	125,000	10,850	16.3 32.6 19.8	3.40	11.6	167.2	3.25	61.2	125.0 239.0 145.0	80.0
ZR144KCE	TFD TF5 TF7	12.0	41,500	142,000	12,350	18.2 36.3 22.0	3.40	11.6	190.9	3.25	61.2	125.0 245.0 145.0	80.0
ZR160KCE	TFD TF7	13.3	45,000	154,000	13,850	20.8 25.1	3.28	11.2	209.1	3.25	64.9	150.0 138.0	82.0
ZR160KCE	TWD TW5 TW7	13.3	45,000	154,000	13,850	20.8 41.5 25.1	3.28	11.2	209.1	3.25	64.9 66.2 64.9	150.0 300.0 139.0	82.0
ZR190KCE	TFD	15.8	53,000	181,000	16,650	26.2	3.19	10.9	249.2	3.25	66.2	179.0	83.0
ZR190KCE	TWD TW5 TW7	15.8	53,000	181,000	16,650	26.2 52.4 31.7	3.19	10.9	249.2	3.25	66.2	173.0 340.0 196.0	83.0
ZR250KCE	TWD TWC TW7	20.8	70,500	240,000	21,700	31.1 67.8 37.6	3.25	11.1	325.2 325.2 318.1	4.67	139.3 138.8 139.3	225.0 505.0 280.0	88.0
ZR310KCE	TWD TWC TW7	25.8	87,000	297,000	27,500	39.0 82.0 47.2	3.17	10.8	410.6	6.80	160.1	272.0 605.0 353.0	90.0
ZR380KCE	TWD TWC TW7	31.7	109,500	374,000	32,800	47.3 94.6 57.3	3.34	11.4	502.7	6.30	176.9	310.0 599.0 358.0	92.0

Note:
All Values As Per AHRI Standards : Evaporating Temp. : 7.2°C , Condensing Temp. : 54.4°C , Subcooling : 8.3K , Superheat : 11.1K , Ambient Temp. : 35°C

Tandem and Trio Model Availability

Model	Nominal HP	Configuration	Capacity (W)				Even Tandem	Uneven Tandem	Trio
			50 Hz / 3 Ph	60 Hz / 3 Ph					
			380 / 420V	460V	200 / 230V	380V			
ZRT96K3E	8.0	ZR48K3E + ZR48K3E	22,500	27,500	27,100	-	•		
ZRT108K3E	9.0	ZR54K3E + ZR54K3E	24,600	29,600	-	-	•		
ZRT122K3E	10.0	ZR61K3E + ZR61K3E	28,000	34,000	34,000	-	•		
ZRT136KCE	11.0	ZR68KCE + ZR68KCE	31,500	38,500	38,500	-	•		
ZRT144KCE	12.0	ZR72KCE + ZR72KCE	32,500	40,000	40,000	40,000	•		
ZRT162KCE	13.5	ZR81KCE + ZR81KCE	36,500	45,000	45,000	45,000	•		
ZRT168KCE	14.0	ZR84KCE + ZR84KCE	39,000	47,500	47,500	47,500	•		
ZRU178KCE	14.8	ZR84KCE + ZR94KCE	44,000	53,000	53,000	53,000		•	
ZRT188KCE	15.7	ZR94KCE + ZR94KCE	45,500	54,500	54,500	54,500	•		
ZRT216KCE	18.0	ZR108KCE + ZR108KCE	51,500	61,500	61,500	61,500	•		
ZRT250KCE	21.0	ZR125KCE + ZR125KCE	57,500	69,500	69,500	69,500	•		
ZRU285KCE	23.8	ZR125KCE + ZR160KCE	68,000	82,500	82,500	82,500		•	
ZRT288KCE	24.0	ZR144KCE + ZR144KCE	66,000	79,500	79,500	79,500	•		
ZRU315KCE	26.3	ZR125KCE + ZR190KCE	73,000	88,000	88,000	88,000		•	
ZRT320KCE	27.0	ZR160KCE + ZR160KCE	74,500	90,000	90,000	90,000	•		
ZRU334KCE	27.8	ZR144KCE + ZR190KCE	79,000	96,500	96,500	96,500		•	
ZRY375KCE	31.3	ZR125KCE + ZR125KCE + ZR125KCE	90,500	109,500	109,500	109,500			•
ZRT380KCE	31.7	ZR190KCE + ZR190KCE	87,600	106,000	106,000	106,000	•		
ZRY432KCE	36.0	ZR144KCE + ZR144KCE + ZR144KCE	103,000	124,500	124,500	124,500			•
ZRY480KCE	40.0	ZR160KCE + ZR160KCE + ZR160KCE	112,000	135,000	135,000	135,000			•
ZRT500KCE	42.0	ZR250KCE + ZR250KCE	115,000	138,000	138,000	138,000	•		
ZRY570KCE	47.5	ZR190KCE + ZR190KCE + ZR190KCE	131,500	158,500	158,500	158,500			•
ZRT600KCE	50.0	ZR300KCE + ZR300KCE	138,500	170,000	170,000	170,000	•		
ZRT760KCE	63.0	ZR380KCE + ZR380KCE	180,000	217,000	217,000	217,000	•		
ZRY900KCE	75.0	ZR300KCE + ZR300KCE + ZR300KCE	208,500	255,500	255,500	255,500			•
ZRY930KCE	77.5	ZR310KCE + ZR310KCE + ZR310KCE	216,500	259,000	259,000	-			•
ZRY114MCE	95.0	ZR380KCE + ZR380KCE + ZR380KCE	273,500	328,000	328,000	328,000			•

Note:
Tandem /Trio assemblies by system manufacturers. Emerson Climate Technologies can provide full technical support.

220-240V ; 50Hz , 1 Phase

Model	Nominal HP	Capacity		Input Power (W)	Current (A)	COP (W/W)	EER (Btu/ W h)	Displacement (cc/ Rev.)	Oil Quantity (l)	Net Weight (kg)	LRA (A)	Sound Power @ 1 m (dBA)
		(W)	(Btu/h)									
ZR22K3E PFJ	1.8	3,500	12,000	1,190	5.5	2.96	10.1	30.7	1.12	25.9	47.0	65.0
ZR28K3E PFJ	2.3	4,700	16,000	1,510	7.4	3.11	10.6	39.3	1.12	27.2	61.0	65.0
ZR34K3E PFJ	2.8	5,600	19,100	1,780	8.8	3.14	10.7	46.2	1.24	28.6	76.0	68.0
ZR40K3E PFJ	3.3	6,450	22,000	2,170	11.5	2.96	10.1	54.2	1.24	27.9	100.0	68.0
ZR47K3E PFJ	3.9	7,950	27,200	2,620	16.2	3.05	10.4	63.3	1.24	31.3	114.0	68.0
ZR48K3E PFJ	4.0	8,150	27,800	2,670	16.5	3.05	10.4	65.5	1.24	31.3	114.0	68.0

208-230V ; 60Hz , 1 Phase

Model	Nominal HP	Capacity		Input Power (W)	Current (A)	COP (W/W)	EER (Btu/ W h)	Displacement (cc/ Rev.)	Oil Quantity (l)	Net Weight (kg)	LRA (A)	Sound Power @ 1 m (dBA)
		(W)	(Btu/h)									
ZR40K3E PFV	3.3	7,950	27,100	2,550	12.2	3.11	10.6	54.2	1.24	29.7	104.0	71.0
ZR61KCE PFV	5.1	12,200	41,700	3,590	20.4	3.40	11.6	82.6	1.66	39.5	144.0	74.0
ZR68KCE PFV	5.7	13,750	46,900	4,420	22.2	3.11	10.6	93.0	1.77	40.4	176.0	75.0

380-420V ; 50Hz , 3 Phase

Model	Nominal HP	Capacity		Input Power (W)	Current (A)	COP (W/W)	EER (Btu/ W h)	Displacement (cc/ Rev.)	Oil Quantity (l)	Net Weight (kg)	LRA (A)	Sound Power @ 1 m (dBA)
		(W)	(Btu/h)									
ZR22K3E TFD	1.8	3,600	12,300	1,230	2.4	2.93	10.0	30.7	1.12	24.5	24.0	65.0
ZR28K3E TFD	2.3	4,750	16,200	1,570	3.2	3.02	10.3	39.3	1.12	25.4	32.0	65.0
ZR34K3E TFD	2.8	5,550	18,900	1,830	3.7	3.02	10.3	46.2	1.24	26.9	40.0	68.0
ZR36K3E TFD	3.0	5,400	18,500	1,992	3.8	2.72	9.3	49.5	1.24	27.2	40.0	68.0
ZR40K3E TFD	3.3	6,500	22,100	2,090	4.1	3.11	10.6	54.2	1.24	28.1	46.0	68.0
ZR48KCE TFD	4.0	7,900	26,900	2,420	4.8	3.25	11.1	65.5	1.36	28.1	50.0	71.0
ZR61KCE TFD	5.1	10,050	34,300	2,990	6.3	3.37	11.5	82.6	1.95	36.1	65.5	71.0
ZR81KCE TFD	6.8	13,300	45,400	4,010	8.6	3.31	11.3	107.8	1.77	39.0	101.0	72.0
ZR84KCE TFD	7.0	13,350	45,600	4,200	10.0	3.18	10.9	113.6	2.51	57.2	100.0	79.0
ZR94KCE TFD	7.8	15,700	53,500	4,710	10.4	3.33	11.4	127.2	2.51	57.2	95.0	74.0
ZR108KCE TFD	9.0	17,600	59,900	5,260	11.6	3.34	11.4	142.9	3.25	59.9	111.0	74.0
ZR125KCE TFD	10.4	20,500	70,000	6,150	12.2	3.34	11.4	167.2	3.25	61.2	118.0	74.0
ZR144KCE TFD	12.0	23,300	79,500	6,950	13.6	3.37	11.5	190.9	3.25	61.2	118.0	75.0
ZR160KCE TFD TWD	13.3	25,500	87,000	7,600	15.7	3.37	11.5	209.1	3.25	64.9	140.0	78.0
ZR190KCE TFD TWD	15.8	30,500	104,000	9,200	20.6	3.31	11.3	249.2	3.25	66.2	174.0 173.0	82.0
ZR250KCE TWD	20.8	40,000	137,000	12,200	22.6	3.28	11.2	325.2	4.67	139.3	225.0	83.0
ZR310KCE TWD	25.8	50,000	170,000	15,300	28.3	3.25	11.1	410.6	6.80	160.1	272.0	85.0
ZR380KCE TWD	31.7	63,000	215,000	18,800	35.6	3.34	11.4	502.7	6.30	176.9	310.0	88.0

Note:
All Values As Per AHRI Standards : Evaporating Temp. : 7.2°C , Condensing Temp. : 54.4°C , Subcooling : 8.3K , Superheat : 11.1K , Ambient Temp. : 35°C

460V / 200-230V / 380V ; 60Hz , 3 Phase

Model		Nominal HP	Capacity (W)	Capacity (Btu/h)	Input Power (W)	Current (A)	COP (W/W)	EER (Btu/ W h)	Displacement (cc/ Rev.)	Oil Quantity (l)	Net Weight (kg)	LRA (A)	Sound Power @ 1 m (dBA)
ZR22K3E	TFD	1.8	4,350	14,800	1,480	2.9	2.93	10.0	30.7	1.12	24.5	22.4	68.0
ZR28K3E	TFD TF5	2.3	5,800	19,800	1,910	3.3 6.6	3.02	10.3	39.3	1.12	25.4	31.0 63.0	68.0
ZR34K3E	TFD	2.8	6,850	23,300	2,250	3.9	3.05	10.4	46.2	1.24	26.9	39.0	71.0
ZR36K3E	TFD	3.0	7,150	24,400	2,390	3.8	2.99	10.2	49.5	1.24	27.2	39.0	71.0
ZR40K3E	TFD	3.3	7,900	26,900	2,580	4.1	3.05	10.4	54.2	1.24	28.1	44.0	71.0
ZR48KCE	TFD	4.0	9,600	32,800	2,970	5.0	3.22	11.0	65.5	1.36	28.2	50.0	71.0
ZR48K3E	TFD TF5	4.0	9,500 9,650	32,500 32,900	3,090 2,990	5.0 9.8	3.08 3.22	10.5 11.0	65.5	1.36	28.1 32.7	50.0 91.0	71.0
ZR61KCE	TFD TF5	5.1	12,350 12,150	42,200 41,500	3,550 3,710	6.4 13.1	3.49 3.28	11.9 11.2	82.6	1.95	36.1 35.4	63.0 128.0	74.0
ZR68KCE	TFD	5.7	13,850	47,200	4,030	6.5	3.43	11.7	93.0	1.77	39.0	75.0	75.0
ZR81KCE	TFD TF5	6.8	16,100 16,000	55,000 54,500	4,950 4,760	8.9 16.0	3.25 3.37	11.1 11.5	107.8	1.77	39.0	100.0 164.0	75.0
ZR84KCE	TFD TF5 TF7	7.0	16,200	55,400	5,150	9.8 19.5 11.8	3.15	10.8	113.6	2.51	57.2	100.0 196.0 135.0	82.0
ZR94KCE	TFD TF5 TF7	7.8	18,800	64,000	5,700	11.4 22.8 13.8	3.28	11.2	127.2	2.51	57.2 56.7 57.2	95.0 195.0 123.0	79.0
ZR108KCE	TFD TF5 TF7	9.0	21,100	72,100	6,440	11.5 22.9 13.9	3.28	11.2	142.9	3.25	59.9 59.9 60.3	114.0 225.0 140.0	80.0
ZR125KCE	TFD TF5 TF7	10.4	24,900	85,000	7,570	12.4 24.8 15.0	3.30	11.3	167.2	3.25	61.2	125.0 239.0 145.0	80.0
ZR144KCE	TFD TF5 TF7	12.0	28,300 28,400 28,300	96,400 96,900 96,400	8,500 8,480 8,500	13.7 30.0 16.5	3.33 3.34 3.33	11.4	190.9	3.25	61.2	125.0 245.0 145.0	80.0
ZR160KCE	TFD	13.3	31,000	105,000	9,500	16.3	3.25	11.1	209.1	3.25	64.9	150.0	82.0
ZR160KCE	TWD TW5 TW7	13.3	31,000	105,000	9,500	16.3 32.6 19.8	3.25	11.1	209.1	3.25	64.9 66.2 64.9	150.0 300.0 139.0	82.0
ZR190KCE	TFD	15.8	37,000	127,000	11,300	21.4	3.28	11.2	249.2	3.25	66.2	179.0	83.0
ZR190KCE	TWD TW5 TW7	15.8	37,000	127,000	11,300	21.4 42.8 25.9	3.28	11.2	249.2	3.25	66.2	173.0 340.0 196.0	83.0
ZR250KCE	TWD TW5 TW7	20.8	48,500	166,000	15,100	22.7 49.6 27.5	3.22	11.0	325.2 325.2 318.1	4.67	139.3 138.8 139.3	225.0 505.0 280.0	88.0
ZR310KCE	TWD TW7	25.8	60,000	205,000	18,800	28.3 34.3	3.19	10.9	410.6	6.80	160.1	272.0 353.0	90.0
ZR380KCE	TWD TW5 TW7	31.7	74,000	253,000	22,400	34.7 69.4 42.0	3.31	11.3	502.7	6.30	176.9	310.0 599.0 358.0	92.0

Tandem and Trio Model Availability

R134a

Model	Nominal HP	Configuration	Capacity (W)				Even Tandem	Uneven Tandem	Trio
			50 Hz / 3 Ph	60 Hz / 3 Ph					
			380 / 420V	460V	200 / 230V	380V			
ZRT96K3E	8.0	ZR48K3E + ZR48K3E	15,400	18,500	-	-	•		
ZRT136KCE	11.0	ZR68KCE + ZR68KCE	22,600	27,400	-	-	•		
ZRT144KCE	12.0	ZR72KCE + ZR72KCE	23,400	28,400	28,400	-	•		
ZRT162KCE	13.5	ZR81KCE + ZR81KCE	26,300	32,000	31,500	-	•		
ZRT168KCE	14.0	ZR84KCE + ZR84KCE	26,450	32,165	-	-	•		
ZRT188KCE	16.0	ZR94KCE + ZR94KCE	31,066	37,147	-	-	•		
ZRT216KCE	18.0	ZR108KCE + ZR108KCE	-	-	41,616	-	•		
ZRT250KCE	21.0	ZR125KCE + ZR125KCE	-	49,000	47,200	49,000	•		
ZRT288KCE	24.0	ZR144KCE + ZR144KCE	46,500	54,000	54,500	54,000	•		
ZRT500KCE	42.0	ZR250KCE + ZR250KCE	79,500	96,500	96,500	96,500	•		
ZRT600KCE	50.0	ZR300KCE + ZR300KCE	93,000	113,000	113,000	113,000	•		
ZRT760KCE	63.0	ZR380KCE + ZR380KCE	-	149,500	149,500	149,500	•		

Notes:
All Values As Per AHRI Standards : Evaporating Temp. : 7.2°C , Condensing Temp. : 54.4°C , Subcooling : 8.3K, Superheat : 11.1K , Ambient Temp. : 35°C
Tandem /Trio assemblies by system manufacturers. Contact Application Engineering for more information.

Copeland Scroll™ Compressors
for R410A refrigerant



Copeland Scroll™ compressors are perfectly suitable for split systems, rooftops, packaged units and chiller applications.

Copeland Scroll compressors offer an advantage of fewer moving parts with scroll sets wearing in. Meanwhile, both axial and radial compliance allows the scroll compressor to be more tolerant of liquid refrigerant and debris thus enhancing reliability. Furthermore, Emerson's well established e xpertise in paralleling multiple compressors to one efficient solution provides a unique advantage and an assured benefit even for the manufacturing of large capacity systems (air cooled and water cooled chillers).

The broad range of products goes from ZP14 (1.2HP) to ZP725 (60HP) in single compressor applications and to 120/180 HP in Tandem/trio applications in single module.

Features and Benefits

- Copeland™ qualified tandem and trio configurations for superior seasonal efficiency
- Copeland Scroll axial and radial compliance for superior reliability and efficiency
- Low Life Cycle Climate Performance (LCCP)
- Wide scroll line-up in R410A
- Low sound and vibration level
- Low oil circulation rate
- Extended 5K suction superheat operating envelope suitable for heat pump applications - Contact Application Engineering for more information

Maximum Allowable Pressure (PS)

- ZP14 to ZP91:
  Low Side PS 28 bar(g) / High Side PS 43 bar(g)
- ZP90 to ZP485:
  Low Side PS 29.5 bar(g) / High Side PS 45 bar(g)

Operating Envelopes

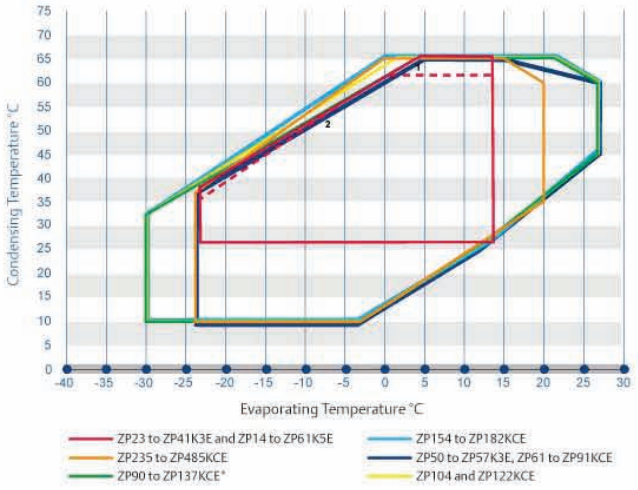

Notes:
Dashed Red Line 1 Indicates 63 °C Condensing Limit For ZP51 To ZP61K5E - PFV For -5% Voltage Tolerance
Dashed Red Line 2 Indicates The Limit Of Operation With Constant Return Gas Temperature of 35 °C
*Does Not Include ZP91, ZP104, ZP122KCE



Product Line-up

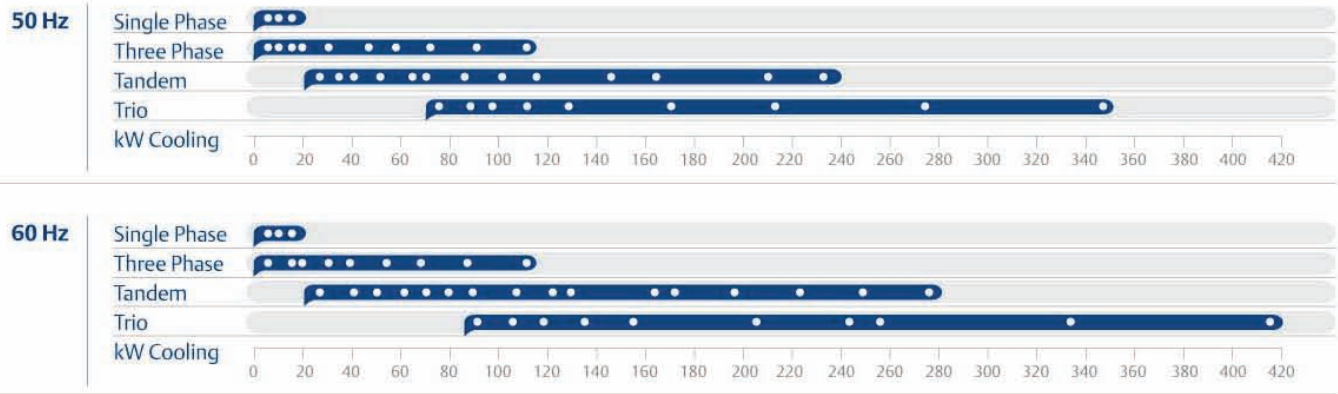

Technical Data

220-240V ; 50Hz , 1 Phase

Model	Nominal HP	Capacity		Input Power (W)	Current (A)	COP (W/W)	EER (Btu/ W h)	Displacement (cc/ Rev.)	Oil Quantity (l)	Net Weight (kg)	LRA (A)	Sound Power @ 1 m (dBA)
		(W)	(Btu/h)									
ZP16KSE PFZ	1.3	3,600	12,300	1,400	6.6	2.58	8.8	15.1	0.74	21.7	44.0	66.0
ZP20KSE PFZ	1.7	4,800	16,300	1,750	8.1	2.73	9.3	19.3	0.74	21.7	52.0	66.0
ZP23K3E PFZ	1.9	5,700	19,400	2,050	9.5	2.78	9.5	23.2	1.12	28.6	61.0	65.0
ZP24KSE PFZ	2.0	5,750	19,600	2,000	9.3	2.87	9.8	22.8	0.74	21.9	60.0	66.0
ZP25KSE PFZ	2.1	5,950	20,300	2,110	9.8	2.81	9.6	23.9	0.74	22.0	60.0	66.0
ZP26K3E PFZ	2.2	6,050	20,700	2,300	11.0	2.64	9.0	25.2	1.12	28.9	74.0	65.0
ZP29KSE PFZ	2.4	6,900	23,500	2,400	11.0	2.87	9.8	27.5	0.74	22.8	67.0	66.0
ZP31KSE PFZ	2.6	7,350	25,100	2,550	11.8	2.89	9.9	29.5	0.74	22.8	67.0	66.0
ZP32K3E PFJ	2.7	7,550	25,700	2,860	13.2	2.64	9.0	30.7	1.24	31.3	82.0	67.0
ZP36KSE PFZ	3.0	8,800	30,000	2,940	14.1	2.99	10.2	34.4	1.24	29.4	98.0	68.0
ZP39KSE PFZ	3.3	9,200	31,400	3,140	14.5	2.93	10.0	36.9	1.24	33.1	98.0	68.0
ZP41K3E PFZ PFJ	3.4	9,850	33,600	3,510 3,570	17.2 16.9	2.8 2.75	9.6 9.4	39.3	1.24	29.5 31.8	114.0 97.0	67.0
ZP42KSE PFZ	3.5	10,200	34,800	3,480	16.7	2.93	10.0	39.8	1.24	33.1	128.0	68.0
ZP50K3E PFZ PFJ	4.2	12,500	42,600	4,100	19.5	3.05	10.4	48.2	1.66	44.0	136.0	62.0
ZP51KSE PFZ	4.3	12,150	41,500	4,050	19.8	3.00	10.3	48.2	1.24	34.4	126.0	68.0
ZP54KSE PFZ	4.5	13,050	44,500	4,320	20.9	3.02	10.3	51.1	1.24	34.4	115.5	70.0
ZP57K3E PFJ	4.8	13,950	47,600	4,700	24.0	2.96	10.1	54.3	1.66	41.7	153.0	72.0
ZP61KCE PFZ	5.1	14,800	50,500	4,950	23.3	2.99	10.2	58.1	1.77	40.3	147.0	72.0
ZP67KCE PFZ	5.6	16,100	55,000	5,450	25.7	2.96	10.1	63.0	1.77	39.9	155.0	72.0

Continuation
208-230V ; 60Hz , 1 Phase

Model	Nominal HP	Capacity		Input Power (W)	Current (A)	COP (W/W)	EER (Btu/ W h)	Displacement (cc/ Rev.)	Oil Quantity (l)	Net Weight (kg)	LRA (A)	Sound Power @ 1 m (dBA)
		(W)	(Btu/h)									
ZP16KSE PFZ	1.3	3,600	12,300	1,400	6.6	2.58	8.8	15.1	0.74	21.7	44.0	66.0
ZP20KSE PFZ	1.7	4,800	16,300	1,750	8.1	2.73	9.3	19.3	0.74	21.7	52.0	66.0
ZP23K3E PFZ	1.9	5,700	19,400	2,050	9.5	2.78	9.5	23.2	1.12	28.6	61.0	65.0
ZP24KSE PFZ	2.0	5,750	19,600	2,000	9.3	2.87	9.8	22.8	0.74	21.9	60.0	66.0
ZP25KSE PFZ	2.1	5,950	20,300	2,110	9.8	2.81	9.6	23.9	0.74	22.0	60.0	66.0
ZP26K3E PFZ	2.2	6,050	20,700	2,300	11.0	2.64	9.0	25.2	1.12	28.9	74.0	65.0
ZP29KSE PFZ	2.4	6,900	23,500	2,400	11.0	2.87	9.8	27.5	0.74	22.8	67.0	66.0
ZP31KSE PFZ	2.6	7,350	25,100	2,550	11.8	2.89	9.9	29.5	0.74	22.8	67.0	66.0
ZP32K3E PFJ	2.7	7,550	25,700	2,860	13.2	2.64	9.0	30.7	1.24	31.3	82.0	67.0
ZP42K5E PFV	3.5	12,300	42,000	4,070	18.4	3.02	10.3	39.8	1.24	33.1	117.0	68.0
ZP44K5E PFV	3.7	13,000	44,400	4,270	19.3	3.05	10.4	42.0	1.24	33.5	135.0	68.0
ZP49K5E PFV	4.1	14,500	49,400	4,690	21.2	3.09	10.6	46.4	1.24	34.4	134.0	68.0
ZP51K5E PFV	4.3	14,950	51,000	4,860	21.8	3.08	10.5	48.2	1.24	34.4	134.0	68.0
ZP57K5E PFV	4.8	16,700	57,000	5,460	25.5	3.05	10.4	53.5	1.24	34.3	178.0	68.0
ZP61K5E PFV	5.1	18,000	61,500	5,860	27.2	3.08	10.5	57.2	1.24	35.0	178.0	68.0

Note:
All Values As Per AHRI Standards : Evaporating Temp. : 7.2°C , Condensing Temp. : 54.4°C , Subcooling : 8.3K, Superheat : 11.1K , Ambient Temp. : 35 °C

380-420V ; 50Hz , 3 Phase

Model	Nominal HP	Capacity		Input Power (W)	Current (A)	COP (W/W)	EER (Btu/ W h)	Displacement (cc/ Rev.)	Oil Quantity (l)	Net Weight (kg)	LRA (A)	Sound Power @ 1 m (dBA)
		(W)	(Btu/h)									
ZP24K5E TFD	2.0	5,700	19,400	2,020	3.6	2.81	9.6	22.8	0.74	21.3	28.0	66.0
ZP26K3E TFD	2.2	6,200	21,100	2,270	4.1	2.73	9.3	25.2	1.12	27.2	32.0	65.0
ZP29K5E TFD	2.4	6,800	23,200	2,420	4.4	2.81	9.6	27.5	0.74	21.8	38.0	66.0
ZP29KSE TFM	2.4	7,000	23,900	2,380	4.3	2.93	10.0	27.5	0.74	22.3	38.0	66.0
ZP31KSE TFM	2.6	7,350	25,000	2,580	4.6	2.84	9.7	29.5	0.74	22.3	38.0	66.0
ZP32K3E TFD	2.7	7,400	25,200	2,680	4.7	2.75	9.4	30.7	1.24	28.1	35.0	67.0
ZP34K5E TFD	2.8	8,200	28,000	2,830	5.2	2.90	9.9	32.8	1.24	28.9	46.0	68.0
ZP36K5E TFD	3.0	8,600	29,300	2,940	5.4	2.93	10.0	34.4	1.24	29.2	46.0	68.0
ZP36KSE TFM	3.0	8,900	30,400	2,920	5.4	3.05	10.4	34.4	1.24	29.4	46.0	68.0
ZP38K3E TFD	3.2	9,050	30,800	3,120	5.5	2.90	9.9	36.1	1.24	29.9	48.0	70.0
ZP39KSE TFM	3.3	9,250	31,600	3,150	5.3	2.93	10.0	36.9	1.24	30.9	43.0	68.0
ZP41K3E TFD	3.4	9,800	33,500	3,380	6.0	2.90	9.9	39.3	1.24	29.5	48.0	67.0
ZP42KSE TFM	3.5	10,050	34,300	3,310	5.6	3.03	10.4	39.8	1.24	30.9	43.0	68.0
ZP44K5E TFD	3.7	10,700	36,500	3,540	6.1	3.02	10.3	42.0	1.24	30.9	52.0	68.0
ZP49K5E TFD	4.1	11,950	40,700	3,870	6.5	3.09	10.6	46.4	1.24	33.0	51.5	68.0
ZP49KSE TFM	4.1	11,950	40,700	3,870	6.5	3.09	10.6	46.4	1.24	33.0	51.5	68.0
ZP50K3E TFD	4.2	12,400	42,300	4,100	7.3	3.02	10.3	48.2	1.95	39.5	64.0	69.0
ZP51K5E TFD	4.3	12,050	41,200	4,000	6.9	3.02	10.3	48.2	1.24	32.4	51.5	68.0
ZP51KSE TFM	4.3	12,150	41,500	4,040	7.0	3.02	10.3	48.2	1.24	33.0	51.5	68.0
ZP54K5E TFD	4.5	12,900	44,000	4,280	7.0	3.02	10.3	51.1	1.24	32.4	51.5	68.0
ZP54KSE TFM	4.5	12,900	44,100	4,210	7.1	3.08	10.5	51.1	1.24	33.0	51.5	70.0
ZP57K3E TFD	4.8	13,900	47,500	4,610	8.1	3.02	10.3	54.3	1.66	41.7	74.0	71.0
ZP61KCE TFD	5.1	14,650	50,000	4,750	8.3	3.11	10.6	58.1	1.66	40.3	64.0	71.0
ZP67KCE TFD	5.6	16,100	55,000	5,200	9.1	3.11	10.6	63.0	1.77	39.9	74.0	72.0
ZP72KCE TFD	6.0	17,100	58,500	5,700	9.8	3.02	10.3	67.1	1.77	39.9	75.0	72.0
ZP76KCE TFD	6.3	18,400	62,700	5,850	11.0	3.14	10.7	70.8	1.77	39.5	100.0	72.0
ZP83KCE TFD	6.9	19,900	68,000	6,400	11.7	3.11	10.6	77.2	1.77	39.5	101.0	72.0
ZP90KCE TFD	7.5	21,800	74,500	6,950	12.3	3.14	10.7	84.2	2.51	57.6	95.0	72.0
*ZP91KCE TFD	7.6	21,700	74,000	6,790	12.4	3.19	10.9	84.6	1.77	40.8	101.0	72.0
ZP103KCE TFD	8.6	25,200	86,000	7,800	14.4	3.22	11.0	96.4	3.25	61.2	111.0	74.0
*ZP104KCE TFD	8.7	25,600	87,500	7,840	14.3	3.27	11.2	96.4	2.51	48.0	128.0	74.0
ZP120KCE TFD	10.0	29,300	100,000	9,110	16.6	3.22	11.0	113.6	3.25	61.2	118.0	74.0
*ZP122KCE TFD	10.2	29,900	102,000	9,160	16.6	3.27	11.2	112.3	2.51	48.8	139.0	74.0
ZP137KCE TFD	11.4	32,500	111,000	10,200	18.3	3.19	10.9	127.2	3.25	62.1	118.0	77.0

380-420V ; 50Hz , 3 Phase

Model	Nominal HP	Capacity (W)	Capacity (Btu/h)	Input Power (W)	Current (A)	COP (W/W)	EER (Btu/ W h)	Displacement (cc/ Rev.)	Oil Quantity (l)	Net Weight (kg)	LRA (A)	Sound Power @ 1 m (dBA)
ZP154KCE TFD	12.8	37,000	127,000	11,600	20.8	3.22	11.0	142.9	3.25	64.9	140.0	76.0
ZP154KCE TWD												77.0
ZP182KCE TFD	15.2	44,000	150,000	13,500	26.3	3.25	11.1	167.2	3.25	66.2	174.0	77.0
ZP182KCE TWD					25.7						173.0	79.0
ZP235KCE TWD	19.6	57,000	195,000	17,600	30.0	3.25	11.1	217.2	4.67	140.6	225.0	82.0
ZP295KCE TWD	24.6	71,500	244,000	22,000	37.2	3.25	11.1	268.5	6.80	160.1	272.0	85.0
ZP385KCE TWD	32.1	92,500	316,000	28,500	48.1	3.25	11.1	349.4	6.30	176.9	310.0	85.0
ZP485KCE TWD	40.4	117,000	400,000	36,100	60.3	3.25	11.1	444.5	6.30	200.0	408.0	89.0
**ZP725KCE FED	60.0	180,000	615,000	54,800	93.5	3.29	11.2	550.0	6.30	250.0	567.0	90.0

Note:
**Preliminary Data

460V / 200-230V / 380V / 208-230V ; 60Hz , 3 Phase

Model	Nominal HP	Capacity (W)	Capacity (Btu/h)	Input Power (W)	Current (A)	COP (W/W)	EER (Btu/ W h)	Displacement (cc/ Rev.)	Oil Quantity (l)	Net Weight (kg)	LRA (A)	Sound Power @ 1 m (dBA)
ZP20K3E TFD	1.7	6,000	20,400	2,210	3.2	2.71	9.3	18.9	1.12	25.9	22.4	68.0
ZP20K3E TF5		5,900	20,200	2,220	6.6	2.67	9.1				55.0	
ZP24K5E TFD	2.0	7,050	24,000	2,420	3.7	2.90	9.9	22.8	0.74	21.3	28.0	69.0
ZP24K5E TF5					7.3					21.2	58.0	
ZP26K3E TFD	2.2	7,550	25,700	2,650	4.0	2.84	9.7	25.2	1.12	27.2	31.0	68.0
ZP26K3E TF5		7,450	25,500	2,630	8.0						63.0	
ZP31K5E TFD	2.6	9,150	31,200	3,060	4.6	2.99	10.2	29.5	0.74	22.0	38.0	69.0
ZP31K5E TF5					9.1					21.8	73.0	
ZP32K3E TFD	2.7	8,950	30,500	3,110	4.7	2.87	9.8	30.7	1.24	28.1	35.0	70.0
ZP32K3E TF5		9,300	31,800	3,250	9.4		9.8				77.0	
ZP36K5E TFD	3.0	10,550	36,000	3,490	5.5	3.02	10.3	34.4	1.24	29.2	44.0	71.0
ZP36K5E TF5		10,550			10.8					28.9	88.0	
ZP39K5E TF7	3.3	11,450	39,000	3,750	6.4	3.05	10.4	36.9	1.24	30.4	51.8	71.0
ZP41K3E TFD	3.4	11,950	40,700	3,950	6.0	3.02	10.3	39.3	1.24	29.5	46.0	70.0
ZP41K3E TF5		12,050	41,200	4,000	12.0						91.0	
ZP42K5E TFD	3.5	12,300	41,900	4,060	5.5	3.02	10.3	39.8	1.24	30.4	41.0	71.0
ZP42K5E TF5		12,350	42,200	4,020	11.3	3.08	10.5				83.1	
ZP44K5E TFD	3.7	13,050	44,500	4,220	6.2	3.09	10.6	42.0	1.24	30.9	55.0	71.0
ZP44K5E TF5		13,050	44,500	4,220	12.2		10.6			30.9	98.0	
ZP44K5E TF7		13,150	44,900	4,250	7.6		10.6			30.6	64.0	
ZP49K5E TFD	4.1	14,650	50,000	4,650	6.5	3.15	10.8	46.4	1.24	33.0	52.0	71.0
ZP49K5E TF5		14,550	49,700	4,650	13.4	3.14	10.7			33.0	110.0	
ZP49K5E TF7		14,550	49,600	4,630	7.9	3.14	10.7			32.8	66.0	
ZP51K5E TFD	4.3	15,100	51,500	4,810	6.8	3.14	10.7	48.2	1.24	32.4	52.0	71.0
ZP51K5E TF5			51,500		13.8	3.14	10.7			32.5	110.0	
ZP51K5E TF7			51,600		8.3	3.15	10.8			32.9	66.0	
ZP54K5E TFD	4.5	15,900	54,300	5,070	7.2	3.14	10.7	51.1	1.24	32.4	52.0	71.0
ZP54K5E TF5		15,900	54,300	5,070	14.4	3.14	10.7			32.5	110.0	
ZP54K5E TF7		15,600	53,400	5,100	8.8	3.08	10.5			33.0	65.6	
ZP57K5E TF7	4.8	16,900	57,500	5,320	9.2	3.17	10.8	53.5	1.24	34.3	83.0	71.0
ZP61K5E TF7	5.1	18,000	61,500	5,700	9.7	3.17	10.8	57.2	1.24	35.0	83.0	71.0
ZP61KCE TFD	5.1	18,000	61,500	5,700	8.3	3.17	10.8	58.1	1.66	40.3	62.0	74.0
ZP61KCE TF5					16.8						123.0	
ZP61KCE TF7					10.5						78.0	
ZP67KCE TF7	5.6	19,800	67,500	6,260	11.0	3.17	10.8	63.0	1.66	44.0	88.0	75.0
ZP72KCE TFD	6.0	21,100	72,000	6,750	9.7	3.14	10.7	67.1	1.77	39.9	75.0	75.0
ZP72KCE TF5		21,100	72,000	6,750	20.1	3.14	10.7			39.9	164.0	75.0
ZP72KCE TF7		20,800	71,000	6,850	11.5	3.05	10.4			40.9	73.0	74.0
ZP76KCE TFD	6.3	22,600	77,000	7,060	11.1	3.19	10.9	70.8	1.77	39.5	100.0	75.0
ZP76KCE TF5					20.8						164.0	
ZP76KCE TF7					12.4						94.3	
ZP83KCE TFD	7.0	24,300	83,000	7,650	11.8	3.17	10.8	77.2	1.77	39.5	100.0	75.0
ZP83KCE TF5		24,300	83,000	7,650	22.0					39.5	164.0	
ZP83KCE TF7		24,200	82,500	7,600	13.0					39.9	94.3	
ZP90KCE TFD	7.5	26,500	90,500	8,370	13.0	3.17	10.8	84.2	2.51	57.6	95.0	77.0
ZP90KCE TF5				8,350	26.3					57.6	195.0	
ZP90KCE TF7				8,350	15.4					58.1	123.0	
*ZP91KCE TFD	7.5	26,500	90,500	8,230	12.6	3.22	11.0	84.6	1.77	40.8	100.0	75.0
*ZP91KCE TF5					24.8						191.0	
*ZP91KCE TF7					15.2						123.0	

Notes:
All Values As Per AHRI Standards : Evaporating Temp. : 7.2°C , Condensing Temp. : 54.4°C , Subcooling : 8.3K, Superheat : 11.1K , Ambient Temp. : 35°C
* New Improved Models
**Preliminary Data

Continuation
460V / 200-230V / 380V / 208-230V ; 60Hz , 3 Phase

Model		Nominal HP	Capacity (W)	Capacity (Btu/h)	Input Power (W)	Current (A)	COP (W/W)	EER (Btu/ W h)	Displacement (cc/ Rev.)	Oil Quantity (l)	Net Weight (kg)	LRA (A)	Sound Power @ 1 m (dBA)
	TFD		31,000	105,000		14.3	3.22	11.0			61.2	114.0	
ZP103KCE	TF5	8.5	31,000	105,000	9,550	28.6	3.22	11.0	96.4	3.25	60.8	225.0	77.0
	TF7		30,500	104,000		17.8	3.19	10.9			59.9	140.0	
	TFD					14.4						130.0	
*ZP104KCE	TF7	8.5	31,000	106,000	9,380	16.0	3.31	11.3	96.4	2.51	48.0	135.0	77.0
	TF5**					27.2						239.0	
	TFD					16.4					61.2	125.0	
ZP120KCE	TF5	10.0	36,000	123,000	11,100	32.8	3.25	11.1	113.6	3.25	61.2	239.0	79.0
	TF7					20.4					59.9	145.0	
	TFD					16.9						140.0	
*ZP122KCE	TF7	10.0	36,500	124,000	11,000	18.7	3.31	11.3	112.3	2.51	48.8	151.6	79.0
	TF5**					30.9						240.0	
	TFD		39,500	135,000	12,300	18.0	3.22	11.0			62.1	125.0	
ZP137KCE	TF5	11.5	40,000	137,000	12,400	38.0	3.22	11.0	127.2	3.25	62.6	245.0	80.0
	TF7		40,000	137,000	12,700	22.6	3.17	10.8			62.6	145.0	
	TFD					21.0						150.0	
ZP154KCE	TF7	13.0	45,500	155,000	14,000	24.4	3.25	11.1	142.9	3.25	64.9	138.0	80.0
	TWD					21.0					64.9	150.0	
ZP154KCE	TW5	13.0	45,500	155,000	14,000	42.8	3.25	11.1	142.9	3.25	66.2	300.0	80.0
	TW7					24.4					64.9	139.0	
ZP182KCE	TFD	15.0	53,500	183,000	16,300	26.3	3.28	11.2	167.2	3.25	66.2	179.0	80.0
	TWD					26.3						173.0	
ZP182KCE	TW5	15.0	53,500	183,000	16,300	52.0	3.28	11.2	167.2	3.25	66.2	340.0	82.0
	TW7					31.7						196.0	
	TWD					30.6						225.0	
ZP235KCE	TWC	20.0	69,000	235,000	21,100	64.3	3.25	11.1	217.2	4.67	140.6	505.0	87.0
	TW7					37.0						290.0	
	TWD					38.4	3.25	11.1			160.1	272.0	
ZP295KCE	TWC	24.5	86,000	294,000	26,600	80.7	3.22	11.0	268.5	6.80	159.2	605.0	90.0
	TW7					46.4	3.25	11.1			159.7	353.0	
	TWD					49.9						310.0	
ZP385KCE	TWC	32.0	113,000	385,000	34,700	99.8	3.25	11.1	349.4	6.30	176.9	599.0	89.0
	TW7					60.4						358.0	
ZP485KCE	TWD	40.0	142,000	485,000	44,500	63.5	3.19	10.9	444.5	6.30	200.0	408.0	93.0
**ZP725KCE	FED	60.0	216,000	739,000	67,800	96.0	3.19	10.9	550.0	6.30	250.0	567.0	94.0

Notes:
All Values As Per AHRI Standards : Evaporating Temp. : 7.2°C , Condensing Temp. : 54.4°C , Subcooling : 8.3K, Superheat : 11.1K , Ambient Temp. : 35°C
* New Improved Models
**Preliminary Data

Tandem and Trio Model Availability

R410A

Model	Nominal HP	Configuration	Capacity (W)				Even Tandem	Uneven Tandem	Trio
			50 Hz / 3 Ph	60 Hz / 3 Ph					
			380 / 420V	460V	200 / 230V	380V			
ZPT100K3E	8.0	ZP50K3E + ZP50K3E	24,500	29,600	29,600	29,600	•		
ZPT108K3E	9.0	ZP54K3E + ZP54K3E	25,900	31,500	31,500	31,500	•		
ZPT114K3E	9.5	ZP57K3E + ZP57K3E	27,400	33,500	33,500	33,500	•		
ZPT122KCE	10.0	ZP61KCE + ZP61KCE	29,000	35,500	35,500	35,500	•		
ZPU122KCE	10.0	ZP50K3E + ZP72KCE	29,200	36,000	36,000	-		•	
ZPT134KCE	11.0	ZP67KCE + ZP67KCE	32,000	39,000	39,000	39,000	•		
ZPT144KCE	12.0	ZP72KCE + ZP72KCE	33,500	41,500	41,500	41,500	•		
ZPT152KCE	12.5	ZP76KCE + ZP76KCE	36,500	44,500	44,500	44,500	•		
ZPT166KCE	14.0	ZP83KCE + ZP83KCE	39,500	48,000	48,000	48,000	•		
ZPU174KCE	14.5	ZP83KCE + ZP91KCE	40,500	49,500	49,500	49,500		•	
ZPT180KCE	15.0	ZP90KCE + ZP90KCE	43,000	53,000	53,000	53,000	•		
ZPT182KCE	15.0	ZP91KCE + ZP91KCE	43,000	52,500	52,500	52,500	•		
ZPT206KCE	17.0	ZP103KCE + ZP103KCE	50,000	61,500	61,500	61,500	•		
ZPT208KCE	17.0	ZP104KCE + ZP104KCE	50,656	62,076	62,076	62,076	•		
ZPU223KCE	18.6	ZP103KCE + ZP120KCE	54,000	66,000	66,000	66,000		•	
ZPT240KCE	20.0	ZP120KCE + ZP120KCE	58,000	72,000	72,000	72,000	•		
ZPU240KCE	20.0	ZP103KCE + ZP137KCE	57,000	69,500	69,500	69,500		•	
ZPT244KCE	20.3	ZP122KCE + ZP122KCE	59,000	72,800	-	71,800	•		
ZPU257KCE	21.5	ZP120KCE + ZP137KCE	61,500	74,500	74,500	74,500		•	
ZPU272KCE	23.0	ZP90KCE + ZP182KCE	65,500	80,000	80,000	80,000		•	
ZPT274KCE	23.0	ZP137KCE + ZP137KCE	64,000	79,000	79,000	79,000	•		
ZPU274KCE	23.0	ZP120KCE + ZP154KCE	65,500	80,000	80,000	80,000		•	
ZPU285KCE	23.8	ZP103KCE + ZP182KCE	68,500	84,000	84,000	84,000		•	
ZPU302KCE	25.2	ZP120KCE + ZP182KCE	72,500	88,000	88,000	88,000		•	
ZPT308KCE	25.7	ZP154KCE + ZP154KCE	74,000	90,000	90,000	90,000	•		
ZPY309KCE	25.8	ZP103KCE + ZP103KCE + ZP103KCE	75,500	91,500	91,500	91,500			•
ZPU336KCE	28.0	ZP154KCE + ZP182KCE	80,500	98,000	98,000	98,000		•	
ZPY360KCE	30.0	ZP120KCE + ZP120KCE + ZP120KCE	87,000	106,000	106,000	106,000			•
ZPT364KCE	30.0	ZP182KCE + ZP182KCE	86,500	106,000	106,000	106,000	•		
ZPY411KCE	34.5	ZP137KCE + ZP137KCE + ZP137KCE	97,500	118,500	118,500	118,500			•
ZPU417KCE	35.0	ZP182KCE + ZP235KCE	100,500	122,000	122,000	122,000		•	
ZPY462KCE	38.5	ZP154KCE + ZP154KCE + ZP154KCE	111,000	135,500	135,500	135,500			•
ZPT470KCE	40.0	ZP235KCE + ZP235KCE	112,500	136,000	136,000	136,000	•		
ZPY546KCE	45.5	ZP182KCE + ZP182KCE + ZP182KCE	130,500	159,000	159,000	159,000			•
ZPU567KCE	47.0	ZP182KCE + ZP385KCE	135,000	165,500	165,500	165,500		•	
ZPT590KCE	50.0	ZP295KCE + ZP295KCE	142,500	171,500	171,500	171,500	•		
ZPU680KCE	56.5	ZP295KCE + ZP385KCE	163,000	198,000	198,000	198,000		•	
ZPY705KCE	59.0	ZP235KCE + ZP235KCE + ZP235KCE	170,000	205,000	205,000	205,000			•
ZPT770KCE	64.0	ZP385KCE + ZP385KCE	183,000	222,500	222,500	222,500	•		
ZPU870KCE	72.5	ZP385KCE + ZP485KCE	210,000	251,000	-	-		•	
ZPY885KCE	74.0	ZP295KCE + ZP295KCE + ZP295KCE	213,000	256,500	256,500	256,500			•
ZPT970KCE	81.0	ZP485KCE + ZP485KCE	233,500	278,500	-	-	•		
ZPY115MCE	95.8	ZP385KCE + ZP385KCE + ZP385KCE	275,500	336,000	336,000	336,000			•
ZPY145MCE	120.8	ZP485KCE + ZP485KCE + ZP485KCE	347,000	417,500	-	-			•

Notes:
All Values As Per AHRI Standards : Evaporating Temp. : 7.2°C , Condensing Temp. : 54.4°C , Subcooling : 8.3K, Superheat : 11.1K , Ambient Temp. : 35°C
Tandem /Trio assemblies by system manufacturers. Contact Application Engineering for more information.

Copeland Scroll Digital™ Compressors
for R22, R407C and R410A refrigerant



Copeland Scroll Digital™ Compressors offer stepless capacity modulation in air conditioning applications and a flexible solution for R22, R407C and R410A refrigerant.

In many cooling and heating systems, load and operating conditions vary over a wide range, thus, requiring the use of capacity modulation. The Digital Scroll™ is a simple compressor solution able to assure stepless modulation down to 10% of the nominal capacity allowing for precise temperature and humidity control, superior comfort and energy saving.

This compressor range is the preferred choice for VRF, rooftop, chilled water and process cooling applications.

Features and Benefits

- Wide modulation range from 10% to 100% for immediate load adjustment, precise temperature control and optimal comfort
- Energy efficient operation at part load conditions
- Copeland Scroll axial and radial compliance offers high reliability
- Fewer starts/stops
- Constant speed operation means simpler system oil return management
- Easy to install, commission and maintain - simple system architecture, no complicated electronics and no EMI/EMC problems



Maximum Allowable Pressure (PS)

- Digital ZRD36 to ZRD81:
  Low Side PS 20bar(g) / High Side PS 29.5 bar(g)
- Digital ZRD94 to ZRD125:
  Low Side PS 20bar(g) / High Side PS 32 bar(g)
- Digital ZPD34 to ZPD91:
  Low Side PS 28 bar(g) / High Side PS 43 bar(g)

Operating Envelopes

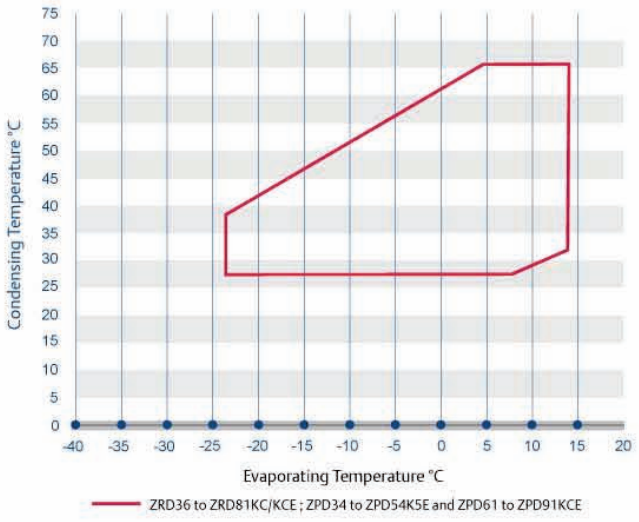



The modulation mechanism of a Copeland Scroll Digital™ compressor

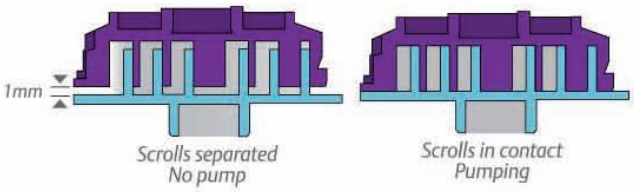

Compressor in loaded state operates as a standard scroll and delivers full capacity and mass flow. During the unloaded state, however, the system delivers no capacity and no mass flows through.

The concept of cycle time

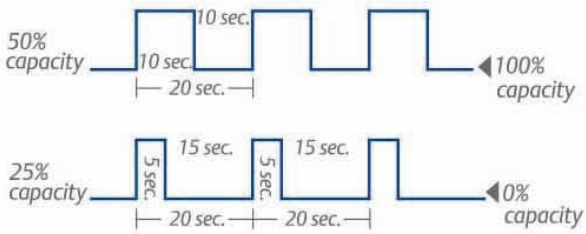

Varying the 'loaded state' and the 'unloaded state' times, any capacity between 10% and 100% can be delivered by the compressor.

Product Line-up

R22/R407C

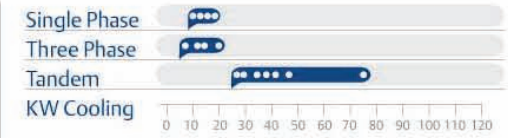

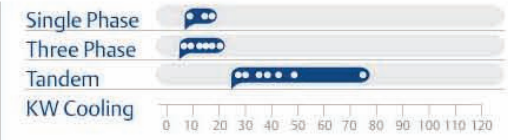

R410A

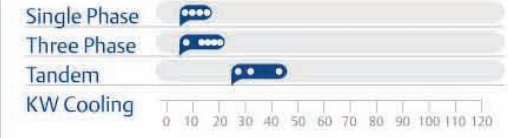

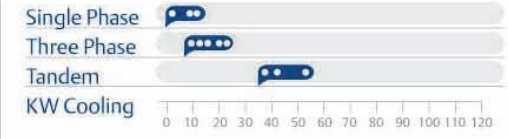

220-240V ; 50Hz , 1 Phase

Model	Nominal HP	Capacity		Input Power (W)	Current (A)	COP (W/W)	EER (Btu/ W h)	Displacement (cc/ Rev.)	Oil Quantity (l)	Net Weight (kg)	LRA (A)	Sound Power @ 1 m (dBA)
		(W)	(Btu/h)									
ZRD42KC PFJ	3.5	10,300	35,100	3,200	15.3	3.22	11.0	57.2	1.24	31.2	97.0	71.0
ZRD48KC PFZ	4.0	11,950	40,800	3,630	16.7	3.28	11.2	65.6	1.36	32.8	125.0	68.0
ZRD61KC PFZ	5.0	14,950	51,000	4,640	22.5	3.22	11.0	82.6	1.89	38.1	150.0	74.0
**ZRD68KC PFZ	6.0	16,700	57,000	5,150	23.9	3.22	11.0	93.0	2.01	39.0	142.0	74.0

208-230V ; 60Hz , 1 Phase

Model	Nominal HP	Capacity		Input Power (W)	Current (A)	COP (W/W)	EER (Btu / W h)	Displacement (cc/ Rev.)	Oil Quantity (l)	Net Weight (kg)	LRA (A)	Sound Power @ 1 m (dBA)
		(W)	(Btu/h)									
ZRD36KC PFV	3.0	10,550	36,000	3,300	14.5	3.19	10.9	48.0	1.24	30.2	95.0	73.0
ZRD48KC PFV	4.0	14,550	49,700	4,320	19.5	3.37	11.5	65.6	1.48	33.5	137.0	73.0
ZRD49KC PFV	4.0	14,550	49,600	4,550	20.8	3.19	10.9	67.1	1.89	42.6	129.0	74.0
ZRD61KC PFV	5.0	18,200	62,000	5,650	26.1	3.19	10.9	82.6	1.89	38.1	148.0	77.0

380-420V ; 50Hz , 3 Phase

Model	Nominal HP	Capacity		Input Power (W)	Current (A)	COP (W/W)	EER (Btu/ W h)	Displacement (cc/ Rev.)	Oil Quantity (l)	Net Weight (kg)	LRA (A)	Sound Power @ 1 m (dBA)
		(W)	(Btu/h)									
ZRD42KC TFD	3.5	10,400	35,500	3,080	5.4	3.37	11.5	57.2	1.24	31.2	46.0	71.0
ZRD48KC TFD	4.0	11,950	40,800	3,510	6.1	3.40	11.6	65.6	1.36	32.7	48.0	75.0
ZRD49KC TFD	4.0	12,050	41,100	3,660	7.1	3.28	11.2	67.1	1.89	42.6	51.5	-
ZRD61KC TFD	5.0	14,950	51,000	4,550	8.1	3.28	11.2	82.6	1.89	38.1	64.0	78.0
ZRD68KC TFD	6.0	17,100	58,500	5,100	8.9	3.37	11.5	93.0	1.89	40.2	74.0	74.0
ZRD72KC TFD	6.0	17,600	60,200	5,330	9.6	3.31	11.3	98.1	1.89	39.9	74.0	71.0
ZRD81KC TFD	7.0	19,900	68,000	6,000	11.1	3.31	11.3	107.8	1.89	40.8	100.0	78.0

460V / 200-230V / 380V ; 60Hz , 3 Phase

Model	Nominal HP	Capacity		Input Power (W)	Current (A)	COP (W/W)	EER (Btu/ W h)	Displacement (cc/ Rev.)	Oil Quantity (l)	Net Weight (kg)	LRA (A)	Sound Power @ 1 m (dBA)
		(W)	(Btu/h)									
ZRD36KC TF5	3.0	10,600	36,200	3,120	9.3	3.40	11.6	48.0	1.24	30.2	77.0	73.0
ZRD42KC TFD	3.5	12,750	43,500	3,770	5.5	3.37	11.5	57.2	1.24	31.2	44.0	73.0
ZRD48KC TFD TF5 TF7	4.0	14,600 14,600 14,450	49,800 49,800 49,300	4,330 4,220 4,320	6.2 12.1 7.6	3.37 3.46 3.34	11.5 11.8 11.4	65.6	1.36	32.7	46.0 110.0 54.0	76.0
ZRD49KC TFD TF5 TF7	4.0	14,550	49,600	4,460	6.5 13.0 7.9	3.25	11.1	67.1	1.89	42.6	47.5 115.0 57.0	72.0 74.0 72.0
ZRD61KC TFD TF5 TF7	5.0	18,000	61,500	5,450 5,450 5,550	8.0 16.0 9.5	3.31 3.31 3.25	11.3 11.3 11.1	82.6	1.89	38.1	62.0 137.0 64.0	78.0
ZRD68KC TFD	6.0	20,800	71,000	6,150	8.9	3.37	11.5	93.0	1.89	40.2	75.0	78.0
ZRD72KC TFD TF5 TF7	6.0	21,400	72,900	6,460	9.3 18.6 11.3	3.31	11.3	98.1	1.89	39.9 39.9 39.5	70.0 156.0 70.0	74.0
ZRD81KC TFD TF7	7.0	23,700	81,500	7,500 7,400	11.7 12.4	3.19	10.9	107.8	1.89	40.8	100.0 78.0	78.0

Note:
* *Preliminary Data

Tandem and Trio Model Availability

Model	Nominal HP	Configuration	Capacity (W)				Even Tandem	Uneven Tandem	Trio
			50 Hz / 3 Ph	60 Hz / 3 Ph					
			380 / 420V	460V	200 / 230V	380V			
ZRDT96KC	8.0	ZRD48KC + ZR48KC	-	28,400	-	28,400	•		
ZRDU11MC	9.2	ZRD61KC + ZR54KC	28,000	34,000	34,000	34,000		•	
ZRDT12MC	10.0	ZRD61KC + ZR61KC	29,000	36,000	36,000	36,000	•		
ZRDU13MC	11.0	ZRD72KC + ZR61KC	32,000	38,500	38,500	38,500		•	
ZRDT14MC	11.5	ZRD72KC + ZR72KC	35,000	42,000	42,000	42,000	•		
ZRDT16MC	13.5	ZRD81KC + ZR81KC	39,500	47,000	-	47,000	•		
ZRDT25MC	21.0	ZRD125KC + ZR125KC	62,000	74,500	74,000	-	•		

Notes:
All Values As Per AHRI Standards : Evaporating Temp. : 7.2°C , Condensing Temp. : 54.4°C , Subcooling : 8.3K , Superheat : 11.1K , Ambient Temp. : 35°C
Tandem/Trio assemblies by system manufacturers. Contact Application Engineering for more information.
Tandem ready compressors provide flexibility to design different module size for VRF applications.

220-240V ; 50Hz , 1 Phase

Model	Nominal HP	Capacity		Input Power (W)	Current (A)	COP (W/W)	EER (Btu/ W h)	Displacement (cc/ Rev.)	Oil Quantity (l)	Net Weight (kg)	LRA (A)	Sound Power @ 1 m (dBA)
		(W)	(Btu/h)									
ZRD42KCE PFJ	3.5	10,350	35,400	3,430	16.4	3.02	10.3	57.2	1.24	31.2	97.0	71.0
ZRD48KCE PFZ	4.0	11,250	38,400	3,690	17.1	3.05	10.4	65.6	1.36	32.8	125.0	68.0
ZRD61KCE PFZ	5.0	14,200	48,500	4,750	22.2	2.99	10.2	82.6	1.89	38.1	150.0	74.0

208-230V ; 60Hz , 1 Phase

Model	Nominal HP	Capacity		Input Power (W)	Current (A)	COP (W/W)	EER (Btu/ W h)	Displacement (cc/ Rev.)	Oil Quantity (l)	Net Weight (kg)	LRA (A)	Sound Power @ 1 m (dBA)
		(W)	(Btu/h)									
ZRD36KCE PFV	3.0	10,650	36,400	3,550	15.6	3.02	10.3	48.0	1.24	30.2	95.0	73.0
ZRD48KCE PFV	4.0	14,650	50,000	4,640	21.0	3.17	10.8	65.6	1.48	33.5	137.0	73.0
ZRD61KCE PFV	5.0	16,900	57,500	5,700	25.9	2.96	10.1	82.6	1.89	38.1	148.0	77.0

380-420V ; 50Hz , 3 Phase

Model	Nominal HP	Capacity		Input Power (W)	Current (A)	COP (W/W)	EER (Btu/ W h)	Displacement (cc/ Rev.)	Oil Quantity (l)	Net Weight (kg)	LRA (A)	Sound Power @ 1 m (dBA)
		(W)	(Btu/h)									
ZRD36KCE TFD	3.0	8,450	28,800	2,610	4.6	3.24	11.1	48.0	1.24	27.3	38.0	73.0
ZRD42KCE TFD	3.5	10,000	34,100	3,130	5.6	3.19	10.9	57.2	1.24	31.2	46.0	71.0
ZRD48KCE TFD	4.0	12,050	41,200	3,780	6.6	3.19	10.9	65.6	1.36	32.7	48.0	75.0
ZRD49KCE TFD	4.0	11,200	38,300	3,700	6.9	3.05	10.4	67.1	1.89	42.6	51.5	72.0
ZRD61KCE TFD	5.0	14,150	48,300	4,610	8.1	3.08	10.5	82.6	1.89	38.1	64.0	76.0
ZRD68KCE TFD	6.0	15,700	53,500	5,200	9.2	3.02	10.3	93.0	1.89	40.2	74.0	74.0
ZRD72KCE TFD	6.0	16,900	57,500	5,350	9.3	3.14	10.7	98.1	1.89	39.9	74.0	74.0
ZRD81KCE TFD	7.0	20,100	68,500	6,450	12.0	3.11	10.6	107.8	1.89	40.8	100.0	78.0

460V / 200-230V / 380V ; 60Hz , 3 Phase

Model	Nominal HP	Capacity		Input Power (W)	Current (A)	COP (W/W)	EER (Btu/ W h)	Displacement (cc/ Rev.)	Oil Quantity (l)	Net Weight (kg)	LRA (A)	Sound Power @ 1 m (dBA)
		(W)	(Btu/h)									
ZRD36KCE TF5	3.0	10,750	36,700	3,350	10.0	3.19	10.9	48.0	1.24	30.2	77.0	73.0
TF7		10,150	34,700	3,150	5.5	3.22	11.0			27.2	38.0	73.0
ZRD42KCE TFD	3.5	12,200	41,700	3,960	7.0	3.08	10.5	57.2	1.24	31.2	44.0	73.0
TFD		14,050	48,000	4,400	6.4	3.19	10.9				46.0	
ZRD48KCE TF5	4.0	9,400	32,100	3,160	9.7	2.99	10.2	65.6	1.36	32.7	110.0	76.0
TF7		14,550	49,700	4,640	8.1	3.14	10.7				54.0	
ZRD49KCE TFD	4.0	13,550	46,200	4,540	6.7	2.99	10.2	67.1	1.89	42.6	47.5	72.0
TFD					8.5						62.0	
ZRD61KCE TF5	5.0	17,400	59,500	5,740	16.9	3.05	10.4	82.6	1.89	38.1	137.0	74.0
TF7					10.3						64.0	
ZRD68KCE TFD	6.0	19,500	66,500	6,250	9.1	3.11	10.6	93.0	1.89	40.2	75.0	78.0
TFD					9.5					39.9	70.0	
ZRD72KCE TF5	6.0	20,700	70,500	6,550	19.0	3.17	10.8	98.1	1.89	39.9	156.0	74.0
TF7					11.5					39.5	70.0	
ZRD81KCE TFD	7.0	22,900	78,000	7,700	12.2	2.99	10.2	107.8	1.89	40.8	100.0	78.0
TF7		24,200	82,500	7,950	10.9	3.05	10.4				78.0	

Tandem and Trio Model Availability

Model	Nominal HP	Configuration	Capacity (W)				Even Tandem	Uneven Tandem	Trio
			50 Hz / 3 Ph	60 Hz / 3 Ph					
			380 / 420V	460V	200 / 230V	380V			
ZRDT96KCE	8.0	ZRD48KCE + ZR48KCE	-	26,200	26,200	26,200	•		
ZRDU11MCE	9.20	ZRD61KCE + ZR54KCE	-	26,230	-	26,230		•	
ZRDT12MCE	10.0	ZRD61KCE + ZR61KCE	28,000	-	-	-	•		
ZRDU13MCE	11.0	ZRD72KCE + ZR61KCE	-	36,500	36,500	36,500		•	
ZRDT14MCE	11.5	ZRD72KCE + ZR72KCE	33,000	40,000	40,000	40,000	•		
ZRDT16MCE	13.5	ZRD81KCE + ZR81KCE	40,000	47,500	47,500	47,500	•		

Notes:
All Values As Per AHRI Standards : Evaporating Temp. : 7.2°C , Condensing Temp. : 54.4°C , Subcooling : 8.3K , Superheat : 11.1K , Ambient Temp. : 35°C
Tandem/Trio assemblies by system manufacturers. Contact Application Engineering for more information.
Tandem ready compressors provide flexibility to design different module size for VRF applications.

220-240V ; 50Hz , 1 Phase

Model	Nominal HP	Capacity		Input Power (W)	Current (A)	COP (W/W)	EER (Btu/ W h)	Displacement (cc/ Rev.)	Oil Quantity (l)	Net Weight (kg)	LRA (A)	Sound Power @ 1 m (dBA)
		(W)	(Btu/h)									
ZPD34K5E PFZ PFJ	3.0	8,200	28,000	2,830	13.6	2.90	9.9	32.8	1.24	30.9	87.0	77.0
ZPD34KSE PFZ	3.0	8,200	28,000	2,830	13.6	2.90	9.9	32.8	1.24	30.9	87.0	77.0
ZPD42K5E PFZ	3.5	10,250	35,000	3,400	16.7	3.02	10.3	39.8	1.24	32.8	128.0	77.0
ZPD42KSE PFZ	3.5	10,250	35,000	3,400	16.7	3.02	10.3	39.8	1.24	32.8	128.0	77.0
ZPD51K5E PFZ	4.5	12,350	42,200	4,100	19.7	3.02	10.3	48.2	1.24	34.8	128.0	77.0
ZPD51KSE PFZ	4.5	12,350	42,200	4,100	19.7	3.02	10.3	48.2	1.24	34.8	128.0	77.0
ZPD54K5E PFZ	4.5	12,900	44,000	4,240	20.2	3.03	10.4	51.1	1.24	34.8	130.0	77.0
ZPD54KSE PFZ	4.5	13,050	44,500	4,320	20.4	3.02	10.3	51.1	1.24	34.8	130.0	70.0
ZPD61KCE PFZ	5.0	14,800	50,500	5,000	23.2	2.96	10.1	58.1	1.89	45.2	147.0	74.0
ZPD67KCE PFZ	5.5	16,000	54,500	5,400	25.7	2.96	10.1	63.0	1.89	45.3	155.0	74.0

208-230V ; 60Hz , 1 Phase

Model	Nominal HP	Capacity		Input Power (W)	Current (A)	COP (W/W)	EER (Btu/ W h)	Displacement (cc/ Rev.)	Oil Quantity (l)	Net Weight (kg)	LRA (A)	Sound Power @ 1 m (dBA)
		(W)	(Btu/h)									
ZPD34K5E PFV	3.0	10,100	34,500	3,380	15.5	2.99	10.2	32.8	1.24	30.9	112.0	77.0
ZPD42K5E PFV	3.5	12,300	42,000	4,090	17.8	3.02	10.3	39.8	1.24	32.8	117.0	77.0
ZPD51K5E PFV	4.5	15,100	51,500	4,910	21.5	3.08	10.5	48.2	1.24	34.8	134.0	77.0
ZPD54K5E PFV	4.5	15,800	54,000	5,140	22.5	3.08	10.5	51.1	1.24	34.8	134.0	77.0

380-420V ; 50Hz , 3 Phase

Model	Nominal HP	Capacity		Input Power (W)	Current (A)	COP (W/W)	EER (Btu/ W h)	Displacement (cc/ Rev.)	Oil Quantity (l)	Net Weight (kg)	LRA (A)	Sound Power @ 1 m (dBA)
		(W)	(Btu/h)									
ZPD34K5E TFD	3.0	8,200	28,000	2,830	5.1	2.90	9.9	32.8	1.24	30.9	46.0	77.0
ZPD42K5E TFD	3.5	10,300	35,200	3,350	5.7	3.08	10.5	39.8	1.24	32.8	52.0	77.0
ZPD51K5E TFD	4.5	12,350	42,100	4,040	6.8	3.05	10.4	48.2	1.24	33.0	52.0	77.0
ZPD54K5E TFD	4.5	13,200	45,100	4,280	7.5	3.08	10.5	51.1	1.24	34.8	62.0	78.0
ZPD61KCE TFD	5.0	14,800	50,500	4,930	8.5	3.02	10.3	58.1	1.89	40.3	64.0	75.0
ZPD67KCE TFD	5.5	16,200	55,200	5,260	9.3	3.08	10.5	63.0	1.89	45.3	74.0	78.0
ZPD72KCE TFD	6.0	17,100	58,500	5,750	9.8	2.99	10.2	67.1	1.89	40.9	75.0	78.0
ZPD83KCE TFD	7.0	20,000	68,100	6,630	12.0	3.02	10.3	77.2	1.77	40.8	101.0	77.0
ZPD91KCE TFD	7.5	21,600	73,800	6,900	12.5	3.14	10.7	84.6	1.77	41.5	101.0	80.0
**ZPD104KCE TFD	9.0	25,600	87,500	8,100	14.6	3.15	10.8	96.4	2.51	48.8	128.0	88.0
**ZPD122KCE TFD	10.0	29,900	102,000	9,450	17.2	3.15	10.8	112.3	2.51	48.8	139.0	88.0

Note:
** Preliminary Data

460V / 200-230V / 380V ; 60Hz , 3 Phase

Model		Nominal HP	Capacity (W)	Capacity (Btu/h)	Input Power (W)	Current (A)	COP (W/W)	EER (Btu/ W h)	Displacement (cc/ Rev.)	Oil Quantity (l)	Net Weight (kg)	LRA (A)	Sound Power @ 1 m (dBA)
ZPD34K5E	TFD	3.0	10,150	34,600	3,390	5.2	2.99	10.2	32.8	1.24	30.9	44.0	
	TF5					10.2						88.0	77.0
	TF7					6.2						52.7	
ZPD42K5E	TFD	3.5	12,500	42,600	3,980	5.7	3.14	10.7	39.8	1.24	32.8	52.0	77.0
	TF5		12,600	43,000	4,020	12.1	3.14	10.7				110.0	77.0
	TF7		12,500	42,700	4,040	7.4	3.11	10.6				65.6	78.0
ZPD51K5E	TFD	4.5	14,950	51,000	4,790	6.9	3.11	10.6	48.2	1.24	33.0	52.0	77.0
	TF5		15,100	51,400	4,810	13.8	3.14	10.7			34.8	110.0	77.0
	TF7		14,750	50,400	4,710	8.5	3.14	10.7			34.8	65.6	78.0
ZPD54K5E	TFD	4.5	16,000	54,500	5,080	7.6	3.14	10.7	51.1	1.24	34.8	62.0	78.0
	TF5			54,600	5,060	14.5	3.17	10.8				110.0	78.0
	TF7			54,500	5,140	9.0	3.11	10.6				65.6	77.0
ZPD61KCE	TFD	5.0	18,200	62,000	5,900	8.6	3.08	10.5	58.1	1.89	40.3	62.0	75.0
	TF5		18,500	63,000	5,800	17.0	3.19	10.9				156.0	75.0
	TF7		18,000	61,500	5,850	10.1	3.08	10.5				64.0	76.0
ZPD67KCE	TFD	5.5	19,800	67,700	6,320	8.5	3.14	10.7	63.0	1.89	45.3	75.0	75.0
ZPD72KCE	TFD	6.0	21,000	71,500	6,800	9.8	3.08	10.5	67.1	1.89	40.9	75.0	78.0
	TF5		21,100	72,000	6,850	20.4	3.08	10.5				164.0	
	TF7		20,800	71,000	6,900	11.6	2.99	10.2				73.0	
ZPD83KCE	TFD	7.0	24,400	83,100	7,980	12.3	3.05	10.4	77.2	1.77	40.8	100.0	78.0
	TF5		24,200	82,500	7,850	23.0	3.08	10.5				186.6	
	TF7		24,200	82,500	7,850	13.2	3.08	10.5				94.3	
ZPD91KCE	TFD	7.5	26,400	90,100	8,300	12.8	3.18	10.9	84.6	1.77	41.5	100.0	81.0
	TF5				8,270	25.3	3.19					191.0	
	TF7				8,270	15.2	3.19					123.0	
**ZPD104KCE	TFD	9.0	31,000	106,000	9,750	14.7	3.18	10.9	96.4	2.51	48.8	130.0	91.0
	TF7				9,770	16.6						135.0	
**ZPD122KCE	TFD	10.0	36,500	124,000	11,400	17.3	3.18	10.9	112.3	2.51	48.8	140.0	91.0
	TF7					19.4						152.0	

Tandem and Trio Model Availability

Model	Nominal HP	Configuration	Capacity (W)				Even Tandem	Uneven Tandem	Trio
			50 Hz / 3 Ph	60 Hz / 3 Ph					
			380 / 420V	460V	200 / 230V	380V			
ZPDT12MCE	10.0	ZPD61KCE + ZP61KCE	29,300	36,000	36,000	-	•		
ZPDT14MCE	11.5	ZPD72KCE + ZP72KCE	34,000	42,000	42,000	42,000	•		
ZPDT18MCE	13.5	ZPD91KCE + ZP91KCE	43,000	52,500	52,500	52,500	•		

Notes:
** Preliminary Data
All Values As Per AHRI Standards : Evaporating Temp. : 7.2°C , Condensing Temp. : 54.4°C , Subcooling : 8.3K , Superheat : 11.1K , Ambient Temp. : 35°C
Tandem/Trio assemblies by system manufacturers. Contact Application Engineering for more information.
Tandem ready compressors provide flexibility to design different module size for VRF applications.

Copeland Scroll™ Compressors
with Vapor Injection Technology



Today, homes and businesses need air conditioning system that can provide sufficient cooling or heating capacity while delivering significant energy savings in whole operating range.

Copeland Scroll™ with Vapor injection allows air conditioning systems to deliver better performance at high ambient conditions. Vapor injection improves the cooling capacity of air conditioning systems up to 12%. This technology is also used in heating systems to improve the heating capacity up to 30% at lower ambient conditions.

The range of product goes from ZRI61 (5.1HP) to ZRI144 (12HP) for R22 refrigerant and ZPI54 (4.5HP) to ZPI90 (7.5HP) for R410A refrigerant.



Features and Benefits

- Copeland Scroll axial and radial compliance for superior reliability and efficiency
- Wide scroll line up
- Low oil circulation rate
- Superior liquid handling capability
- Low sound and vibration level
- Low Life Cycle Climate Performance (LCCP)
- Vapor Injection Technology allows better system performance at high ambient/lower ambient conditions in AC and heating applications

Maximum Allowable Pressure (PS)

- ZRI61 to ZRI144 and Digital ZRJ61 to ZRJ72:
  Low Side PS 20bar(g) / High Side PS 27.5 bar(g)
- ZPI54 to ZPI83 and Digital ZPJ61 to ZPJ83:
  Low Side PS 28bar(g) / High Side PS 43 bar(g)
- ZPI90:
  Low Side PS 29.5 bar(g) / High Side PS 45 bar(g)

Operating Envelopes
R22 and R410A

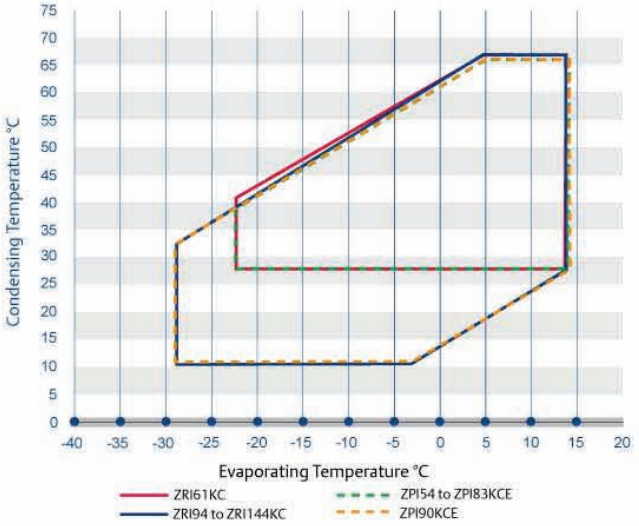



The Concept of Vapor Injection

The vapor injection path

Vapor is injected via the vapor injection line into the compressor

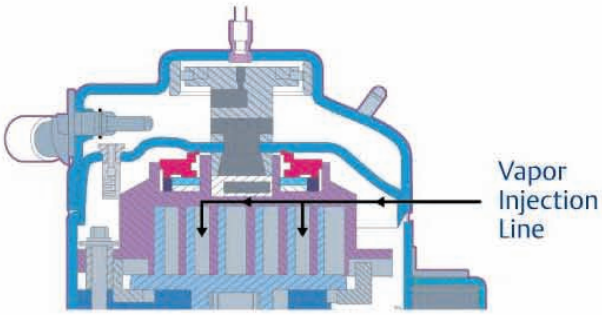

Vapor injection increases system capacity by delivering low temperature liquid refrigerant to the expansion device of the main evaporator. The main liquid line is cooled by taking part of liquid flow and expanding it through the evaporator side of an economizer or subcooler. Vapor from the economizer is fed to the intermediate pockets of the scroll where it is added to the flow that has been taken into the suction from the main evaporator. Compression of injected vapor is a more efficient process since the temperature lift from saturated injection to saturated discharge temperature is less than from saturated suction to saturated discharge. The COP of a vapor injected system can therefore be improved while maintaining capacity if the compressor displacement is reduced.

Product Line-up

Fixed Speed

R22

50 Hz Three Phase kW Cooling

60 Hz Three Phase kW Cooling

R410A

50 Hz Three Phase kW Cooling

60 Hz Three Phase kW Cooling

Digital

R22

50 Hz Three Phase kW Cooling

60 Hz Three Phase kW Cooling

R410A

50 Hz Three Phase kW Cooling

60 Hz Three Phase kW Cooling

380-420V ; 50Hz , 3 Phase

Model	Nominal HP	Capacity (W)	Capacity (Btu/h)	Input Power (W)	Current (A)	COP (W/W)	EER (Btu/ W h)	Displacement (cc/ Rev.)	Oil Quantity (l)	Net Weight (kg)	LRA (A)	Sound Power @ 1 m (dBA)
ZRI61KC TFD	5.1	14,950	51,000	4,580	8.1	3.25	11.1	98.1	1.89	40.2	64.0	78.0
ZRI94KC TFD	7.8	23,300	79,500	6,850	12.7	3.40	11.6	127.2	2.54	57.2	95.0	73.0
ZRI108KC TFD	9.0	26,400	90,000	7,600	13.8	3.47	11.9	142.9	3.25	59.9	111.0	74.0
ZRI125KC TFD	10.4	31,000	105,500	8,900	15.8	3.47	11.9	167.2	3.25	61.2	118.0	75.0
ZRI144KC TFD	12.0	35,000	120,000	10,100	18.5	3.47	11.9	190.9	3.25	61.2	140.0	76.0

460V / 200-230V / 380V ; 60Hz , 3 Phase

Model	Nominal HP	Capacity (W)	Capacity (Btu/h)	Input Power (W)	Current (A)	COP (W/W)	EER (Btu/ W h)	Displacement (cc/ Rev.)	Oil Quantity (l)	Net Weight (kg)	LRA (A)	Sound Power @ 1 m (dBA)
ZRI61KC TFD	5.1	18,200	62,000	5,500	8.5	3.28	11.2	98.1	1.89	40.2	62.0	78.0
***ZRI94KC TFD	7.8	28,000	95,400	8,220	13.1	3.40	11.6	127.2	2.51	57.2	95.0	78.0
TF5		28,300	96,500	8,250	25.3	3.43	11.7			56.7	195.0	
TF7		28,300	96,500	8,200	15.1	3.46	11.8			57.2	123.0	
***ZRI108KC TFD	9.0	32,000	108,500	9,160	14.3	3.47	11.9	142.9	3.25	59.9	114.0	80.0
TF5			109,000	9,200	28.6	3.47	11.9				239.0	
TF7			108,500	9,170	17.1	3.46	11.8				140.0	
****ZRI125KC TFD	10.4	37,500	127,500	10,850	16.8	3.43	11.7	167.2	3.25	61.2	125.0	80.0
TF7					19.6						145.0	
****ZRI144KC TFD	12.0	43,000	146,000	12,300	18.0	3.47	11.9	190.9	3.25	61.2	150.0	80.0
TF7		42,500	145,000	12,250	22.4						145.0	

380-420V ; 50Hz , 3 Phase

R410A

Model	Nominal HP	Capacity (W)	Capacity (Btu/h)	Input Power (W)	Current (A)	COP (W/W)	EER (Btu/ W h)	Displacement (cc/ Rev.)	Oil Quantity (l)	Net Weight (kg)	LRA (A)	Sound Power @ 1 m (dBA)
**ZPI54KCE TFD	4.5	13,350	45,600	4,330	7.9	3.08	10.5	58.1	1.89	40.3	75.0	78.0
ZPI61KCE TFD	5.1	14,950	51,000	4,900	8.6	3.05	10.4	58.1	1.89	40.3	75.0	74.0
ZPI72KCE TFD	6.0	17,100	58,500	5,700	10.8	3.02	10.3	67.1	1.89	40.9	101.0	78.0
ZPI83KCE TFD	6.9	19,800	67,700	6,600	11.8	3.00	10.3	77.2	1.77	39.5	101.0	75.0
**ZPI90KCE TFD	7.5	21,700	74,000	6,960	12.2	3.11	10.6	84.2	2.51	57.6	95.0	72.0
**ZPI104KCE TFD	9.0	25,600	87,500	7,950	14.3	3.22	11.0	96.4	2.51	48.8	128.0	85.0
**ZPI122KCE TFD	10.0	29,900	102,000	9,300	16.9	3.22	11.0	112.3	2.51	48.8	139.0	85.0

460V / 200-230V / 380V ; 60Hz , 3 Phase

Model	Nominal HP	Capacity (W)	Capacity (Btu/h)	Input Power (W)	Current (A)	COP (W/W)	EER (Btu/ W h)	Displacement (cc/ Rev.)	Oil Quantity (l)	Net Weight (kg)	LRA (A)	Sound Power @ 1 m (dBA)
**ZPI54KCE TFD	4.5	16,500	56,400	5,220	7.9	3.17	10.8	58.1	1.89	40.3	75.0	78.0
ZPI61KCE TFD	5.1	18,300	62,400	5,900	8.7	3.11	10.6	58.1	1.89	40.3	75.0	75.0
TF5		18,300	62,600	5,830	18.3	3.15	10.8				164.0	75.0
TF7		18,100	61,900	5,900	10.1	3.08	10.5				75.0	76.0
ZPI72KCE TFD	6.0	21,100	71,900	6,920	9.8	3.05	10.4	67.1	1.89	40.9	100.0	78.0
TF5		21,400	73,100	6,920	21.0	3.09	10.6				186.6	
TF7		20,800	70,900	6,910	11.6	3.00	10.3				100.0	
ZPI83KCE TFD	6.9	24,400	62,400	8,060	12.3	3.03	10.4	77.2	1.77	39.5	100.0	78.0
TF5		24,300	82,800	7,910	24.1	3.06	10.5			39.5	191.0	
TF7		23,900	81,500	7,910	13.2	3.02	10.3			39.9	94.3	
**ZPI90KCE TFD	7.5	26,500	90,300	8,430	12.7	3.14	10.7	84.2	2.51	57.6	95.0	77.0
**ZPI104KCE TFD	9.0	31,000	106,000	9,550	14.4	3.25	11.1	96.4	2.51	48.8	130.0	88.0
TF7					16.2						135.0	
**ZPI122KCE TFD	10.0	36,500	124,000	11,200	16.9	3.25	11.1	112.3	2.51	48.8	140.0	88.0
TF7					19.1						152.0	

Note:
** Preliminary Data
*** Preliminary Data only for TF5 and TF7
**** Preliminary Data only for TF7

380-420V ; 50Hz , 3 Phase

Model	Nominal HP	Capacity		Input Power (W)	Current (A)	COP (W/W)	EER (Btu/ W h)	Displacement (cc/ Rev.)	Oil Quantity (l)	Net Weight (kg)	LRA (A)	Sound Power @ 1 m (dBA)
		(W)	(Btu/h)									
ZRJ61KC TFD	5.1	14,950	51,000	4,590	8.1	3.25	11.1	82.0	1.89	38.9	64.0	78.0
ZRJ72KC TFD	6.0	17,600	60,000	5,450	10.3	3.22	11.0	98.1	1.89	40.2	100.0	74.0

460V / 200-230V / 380V ; 60Hz , 3 Phase

Model	Nominal HP	Capacity		Input Power (W)	Current (A)	COP (W/W)	EER (Btu/ W h)	Displacement (cc/ Rev.)	Oil Quantity (l)	Net Weight (kg)	LRA (A)	Sound Power @ 1 m (dBA)
		(W)	(Btu/h)									
ZRJ61KC TFD	5.1	18,000	61,500	5,500	8.5	3.28	11.2	82.0	1.89	38.9	62.0	78.0
ZRJ72KC TFD	6.0	21,400	73,000	6,650	10.5	3.22	11.0	98.1	1.89	40.2	100.0	74.0

Digital Scroll
R410A

380-420V ; 50Hz , 3 Phase

Model	Nominal HP	Capacity		Input Power (W)	Current (A)	COP (W/W)	EER (Btu/ W h)	Displacement (cc/ Rev.)	Oil Quantity (l)	Net Weight (kg)	LRA (A)	Sound Power @ 1 m (dBA)
		(W)	(Btu/h)									
ZPJ61KCE TFD	5.1	14,950	51,000	4,900	8.6	3.05	10.4	58.1	1.89	40.3	75.0	74.0
ZPJ72KCE TFD	6.0	17,100	58,500	5,700	10.8	3.02	10.3	67.1	1.89	40.9	101.0	78.0
ZPJ83KCE TFD	6.9	19,800	67,700	6,600	11.8	3.00	10.3	77.2	1.77	40.8	101.0	75.0

460V / 200-230V / 380V ; 60Hz , 3 Phase

Model	Nominal HP	Capacity		Input Power (W)	Current (A)	COP (W/W)	EER (Btu/ W h)	Displacement (cc/ Rev.)	Oil Quantity (l)	Net Weight (kg)	LRA (A)	Sound Power @ 1 m (dBA)
		(W)	(Btu/h)									
TFD		18,300	62,400	5,900	8.7	3.11	10.6				75.0	75.0
ZPJ61KCE TF5	5.1	18,500	63,000	5,840	18.2	3.17	10.8	58.1	1.89	40.3	164.0	75.0
TF7		18,100	61,900	5,900	10.1	3.08	10.5				75.0	76.0
TFD		21,100	71,900	6,920	9.8	3.05	10.4				100.0	
ZPJ72KCE TF5	6.0	21,100	71,900	6,940	21.0	3.03	10.4	67.1	1.89	40.9	186.6	78.0
TF7		20,800	70,900	6,910	11.6	3.00	10.3				100.0	
TFD		24,400	83,400	8,060	12.3	3.03	10.4				100.0	
ZPJ83KCE TF5	6.9	24,300	82,800	7,910	24.1	3.06	10.5	77.2	1.77	40.8	191.0	78.0
TF7		23,900	81,500	7,910	13.2	3.02	10.3				94.3	

Note:
All Values As Per AHRI Standards : Evaporating Temp. : 7.2°C , Condensing Temp. : 54.4°C , Subcooling : 8.3K , Superheat : 11.1K , Ambient Temp. : 35°C

Copeland Scroll™ Compressors
for Heat Pump Water Heating



The Copeland Scroll™ ZW compressor provides energy efficient alternative for hot water heating and space heating to replace the use of electric heaters or fuel-fired boilers.

The combination of vapor injection technology and special scroll design enables the air source heat pump to operate at -20°C ambient condition. Compared to its predecessors, ZW provides 40% higher capacity and 22% higher COP at the same ambient condition.

The ZW compressor shows its commitment in promoting green technology by utilizing low GWP refrigerants, thereby directly and indirectly reducing CO2 emissions.



Features and Benefits

- Innovative Scroll Heating™ Technology
- High efficiency water heating solution
- 70% lower energy cost than traditional electric heater and boiler
- Whole season operation design: -20℃ to about 43℃ ambient temperature
- Water temperature up to 65℃
- 40% more heating capacity than traditional heat pump technology

Maximum Allowable Pressure (PS)

- ZW30KS to ZW108KS and ZW30KA to ZW61KA:
  Low Side PS 20 bar(g) / High Side PS 30 bar(g)
- ZW30KSE to ZW108KSE and ZW34KAE to ZW61KAE:
  Low Side PS 20 bar(g) / High Side PS 32.5 bar(g)
- ZW21KAE:
  Low Side PS 20 bar(g) / High Side PS 29.5 bar(g)
- ZW108KA:
  Low Side PS 20 bar(g) / High Side PS 27.5 bar(g)
- ZW108KAE:
  Low Side PS 20 bar(g) / High Side PS 32 bar(g)

Operating Envelopes R22 and R410A

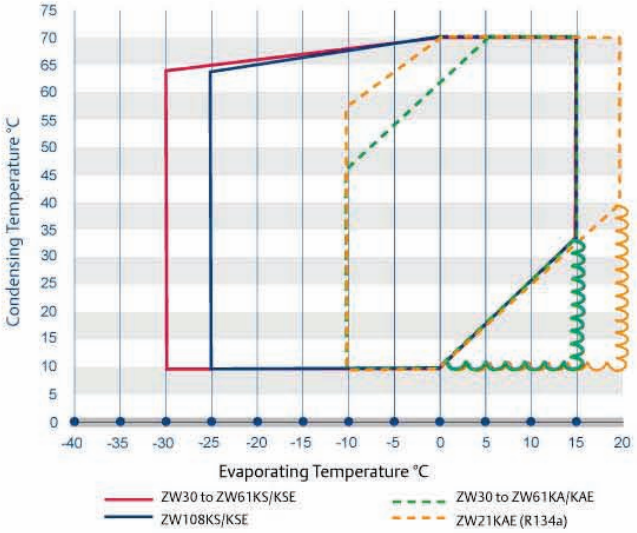

Note:
Wave Lines Correspond To Models In Transition Only



Copeland Scroll Compressors for Heat Pump Water Heating

The Copeland Scroll ZW is designed over Emerson Climate Technologies' strong experience of 100 million scroll compressors and is recognized as a reliable and efficient product. On this strong base, ZW applies Scroll Heating™ technology and multiple new product design features. ZW scrolls hold additional new patent on its design.

Scroll Heating technology reliably expands the HPWH capability all the way to -20°C ambient. It also improves heating capacity by around 40% and COP by 22%.

Copeland Scroll's efficiency is primarily derived from its axial compliance design. The axial compliance design is a pressure balanced mechanism to axially load the scroll elements–providing optimum scroll tip load and ensuring excellent tip sealing. ZW scrolls are required to operate on a much wider range of envelope compared to standard heat pump air-conditioners. This has been accomplished by a new axial compliance pressure balance combination designed specifically for ZW scrolls. It also applies highly efficient and high power motor which can cater to the extremes required by HPWH; to generate low internal losses at mild ambient cold tank heating and provide adequate power demanded at high ambient tank reheating. ZW is designed with options for R22 and HFC refrigerants R407C and R134a.

When it comes to efficiency and reliability in residential and commercial water heating applications, Copeland Scroll compressors continue to set the standard. HPWH powered by Copeland Scroll ZW compressors is a new technology in residential and commercial water heating, thereby replacing traditional water heating systems.

The Copeland Scroll ZW compressor offers additional benefits, including more energy savings and higher water temperature, in comparison to standard scroll technology. Its unique scroll and axial compliance design is configured for higher compression ratio and higher differential pressure. And because these compressors "wear in" over time instead of wearing out, industry experts can count on years of dependable performance, even under the most stringent water heating requirements. With all these benefits, the Copeland Scroll ZW compressor is definitely the most reliable solution available on the HPWH market.

Product Line-up

R22/R407C

50 Hz

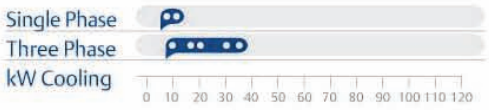

60 Hz

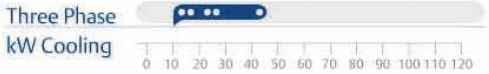

R134a

50 Hz

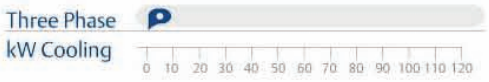

220V ; 50Hz , 1 Phase

Model	Nominal HP	Capacity		Input Power (W)	Current (A)	COP (W/W)	EER (Btu/ W h)	Displacement (cc/ Rev.)	Oil Quantity (l)	Net Weight (kg)	LRA (A)	Sound Power @ 1 m (dBA)
		(W)	(Btu/h)									
ZW30KS PFS	2.5	10,100	34,500	2,520	11.5	4.02	13.7	41.0	0.74	22.2	58.4	68.0

380V ; 50Hz , 3 Phase

Model	Nominal HP	Capacity		Input Power (W)	Current (A)	COP (W/W)	EER (Btu/ W h)	Displacement (cc/ Rev.)	Oil Quantity (l)	Net Weight (kg)	LRA (A)	Sound Power @ 1 m (dBA)
		(W)	(Btu/h)									
ZW34KS TFP	2.8	11,150	38,100	2,820	5.0	3.97	13.6	46.2	0.74	22.2	31.6	68.0
ZW61KS TFP	5.1	20,300	69,100	4,950	8.5	4.09	14.0	82.6	1.36	29.9	59.0	76.0
ZW108KS TFP	9.0	36,000	123,500	8,300	16.1	4.35	14.9	142.9	3.25	59.9	133.0	74.0

380V ; 60Hz , 3 Phase

Model	Nominal HP	Capacity		Input Power (W)	Current (A)	COP (W/W)	EER (Btu/ W h)	Displacement (cc/ Rev.)	Oil Quantity (l)	Net Weight (kg)	LRA (A)	Sound Power @ 1 m (dBA)
		(W)	(Btu/h)									
ZW34KS TF7	2.8	13,450	45,900	3,370	6.0	4.00	13.7	46.2	0.74	22.2	50.0	68.0
ZW108KS TF7	9.0	43,000	147,000	10,050	18.5	4.31	14.7	142.9	3.25	59.9	147.0	80.0

R407C

220V ; 50Hz , 1 Phase

Model	Nominal HP	Capacity		Input Power (W)	Current (A)	COP (W/W)	EER (Btu/ W h)	Displacement (cc/ Rev.)	Oil Quantity (l)	Net Weight (kg)	LRA (A)	Sound Power @ 1 m (dBA)
		(W)	(Btu/h)									
ZW30KSE PFS	2.5	9,800	33,400	2,510	11.5	3.90	13.3	41.0	0.74	22.2	58.4	68.0

380V ; 50Hz , 3 Phase

Model	Nominal HP	Capacity		Input Power (W)	Current (A)	COP (W/W)	EER (Btu/ W h)	Displacement (cc/ Rev.)	Oil Quantity (l)	Net Weight (kg)	LRA (A)	Sound Power @ 1 m (dBA)
		(W)	(Btu/h)									
ZW34KSE TFP	2.8	10,800	36,900	2,800	5.0	3.87	13.2	46.2	0.74	22.2	31.6	68.0
ZW61KSE TFP	5.1	19,500	66,700	4,850	8.4	4.03	13.8	82.6	1.36	29.9	59.0	76.0
ZW108KSE TFP	9.0	35,000	119,000	8,380	16.2	4.16	14.2	142.9	3.25	59.9	133.0	74.0

380V ; 60Hz , 3 Phase

Model	Nominal HP	Capacity		Input Power (W)	Current (A)	COP (W/W)	EER (Btu/ W h)	Displacement (cc/ Rev.)	Oil Quantity (l)	Net Weight (kg)	LRA (A)	Sound Power @ 1 m (dBA)
		(W)	(Btu/h)									
ZW34KSE TF7	2.8	13,050	44,500	3,320	6.0	3.93	13.4	46.2	0.74	22.2	50.0	68.0
ZW61KSE TF7	5.1	23,800	81,300	5,940	10.1	4.02	13.7	82.6	1.36	29.9	65.6	76.0
ZW108KSE TF7	9.0	41,500	141,500	10,150	18.8	4.07	13.9	142.9	3.25	59.9	147.0	80.0

Technical Data

R22

220V ; 50Hz , 1 Phase

Model	Nominal HP	Capacity		Input Power (W)	Current (A)	COP (W/W)	EER (Btu/ W h)	Displacement (cc/ Rev.)	Oil Quantity (l)	Net Weight (kg)	LRA (A)	Sound Power @ 1 m (dBA)
		(W)	(Btu/h)									
ZW30KA PFS	2.5	9,600	32,800	2,310	10.7	4.16	14.2	41.0	0.74	22.2	58.4	68.0

380V ; 50Hz , 3 Phase

Model	Nominal HP	Capacity		Input Power (W)	Current (A)	COP (W/W)	EER (Btu/ W h)	Displacement (cc/ Rev.)	Oil Quantity (l)	Net Weight (kg)	LRA (A)	Sound Power @ 1 m (dBA)
		(W)	(Btu/h)									
ZW34KA TFP	2.8	10,750	36,700	2,580	4.5	4.16	14.2	46.2	0.74	22.2	31.6	68.0
ZW61KA TFP	5.1	19,300	66,000	4,580	8.0	4.22	14.4	82.6	1.36	29.9	59.0	76.0
ZW108KA TFP	9.0	34,000	116,000	7,530	13.7	4.51	15.4	142.9	3.25	59.9	100.0	-

380V ; 60Hz , 3 Phase

Model	Nominal HP	Capacity		Input Power (W)	Current (A)	COP (W/W)	EER (Btu/ W h)	Displacement (cc/ Rev.)	Oil Quantity (l)	Net Weight (kg)	LRA (A)	Sound Power @ 1 m (dBA)
		(W)	(Btu/h)									
ZW61KA TF7	5.1	23,300	79,500	5,650	9.6	4.10	14.0	82.6	1.36	29.9	65.6	76.0

R407C

220V ; 50Hz , 1 Phase

Model	Nominal HP	Capacity		Input Power (W)	Current (A)	COP (W/W)	EER (Btu/ W h)	Displacement (cc/ Rev.)	Oil Quantity (l)	Net Weight (kg)	LRA (A)	Sound Power @ 1 m (dBA)
		(W)	(Btu/h)									
ZW30KAE PFS	2.5	9,300	31,800	2,330	10.8	3.99	13.6	41.0	0.74	22.2	58.4	68.0

380V ; 50Hz , 3 Phase

Model	Nominal HP	Capacity		Input Power (W)	Current (A)	COP (W/W)	EER (Btu/ W h)	Displacement (cc/ Rev.)	Oil Quantity (l)	Net Weight (kg)	LRA (A)	Sound Power @ 1 m (dBA)
		(W)	(Btu/h)									
ZW34KAE TFP	2.8	10,400	35,500	2,600	4.5	4.02	13.7	46.2	0.74	22.2	31.6	68.0
ZW61KAE TFP	5.1	18,800	64,400	4,630	8.1	4.04	13.8	82.6	1.36	29.9	59.0	76.0
ZW108KAE TFP	9.0	31,000	105,500	7,600	13.8	4.06	13.9	142.9	3.25	59.9	100.0	74.0

380V ; 60Hz , 3 Phase

Model	Nominal HP	Capacity		Input Power (W)	Current (A)	COP (W/W)	EER (Btu/ W h)	Displacement (cc/ Rev.)	Oil Quantity (l)	Net Weight (kg)	LRA (A)	Sound Power @ 1 m (dBA)
		(W)	(Btu/h)									
ZW61KAE TF7	5.1	17,000	58,000	5,550	8.1	3.05	10.4	82.6	1.36	29.9	65.6	76.0

R134a

220V ; 50Hz , 1 Phase

Model	Nominal HP	Capacity		Input Power (W)	Current (A)	COP (W/W)	EER (Btu/ W h)	Displacement (cc/ Rev.)	Oil Quantity (l)	Net Weight (kg)	LRA (A)	Sound Power @ 1 m (dBA)
		(W)	(Btu/h)									
ZW21KAE PFZ	1.8	4,650	15,800	1,135	5.2	4.07	13.9	29.0	0.74	22.5	44.0	-

Note:
All Values As Per AHRI Standards : Evaporating Temp. : 7.2°C , Condensing Temp. : 54.4°C , Subcooling : 8.3K , Superheat : 11.1K , Ambient Temp. : 35°C

Dimensional Drawings

ZR22K3 to ZR48K3/C
ZR54KS to ZR61KS
Air Conditioning Models

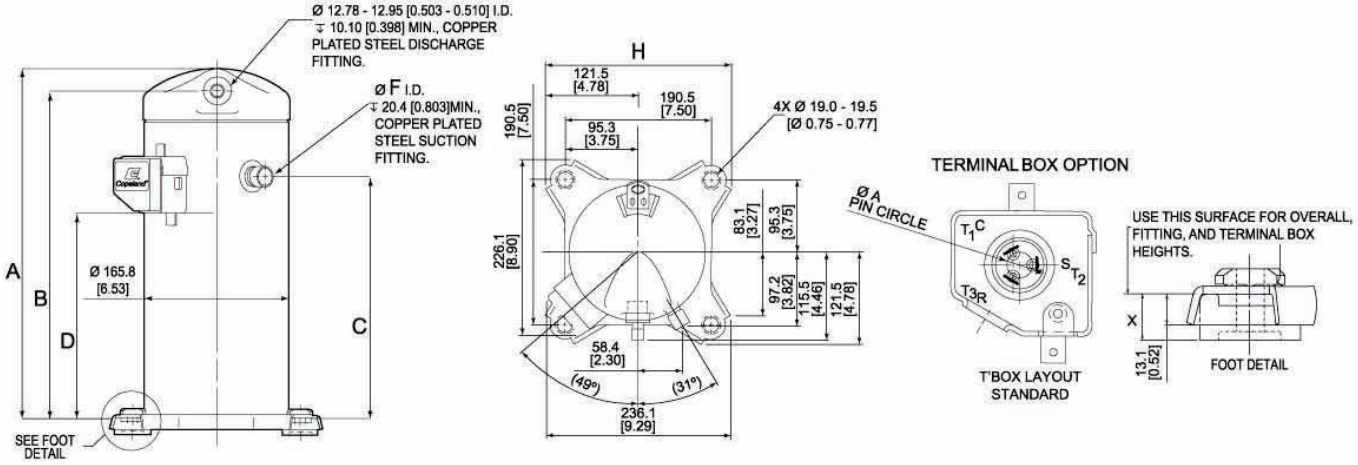

Model Number	Frame Size	A	B	C	D	ØF I.D.	H
ZR22K3 to ZR28K3	165.8 [6.53]	363.8 [14.32]	338.3 [13.32]	244.5 [9.63]	202.9 [7.99]	19.12 - 19.30 [0.753 - 0.761]	246 [9.69]
ZR30K3 to ZR36K3		386.4 [15.21]	360.9 [14.21]	264.4 [10.41]	222.8 [8.77]		
ZR40K3 to ZR42K3		400.2 [15.76]	374.6 [14.75]	277.1 [10.91]	235.5 [9.27]		
ZR45K3/C to ZR48K3/C	165.9 [6.53]	414.3 - 420.3 [16.32 - 16.54]	391.6 [15.42]	293.5 [11.56]	249.0 - 255.0 [9.81 - 10.03]	22.30 - 22.48 [0.878 - 0.885]	
ZR54KS to ZR61KS	165.3 [6.51]	414.2 -420.2 [16.31 - 16.54]	388.6 - 394.6 [15.30 - 15.53]	280.5 - 286.5 [11.05 - 11.27]	238.9 - 244.9 [9.5 -9.6]		239.7 -245.7 [9.44 - 9.67]

ZR28M to ZR30M
Air Conditioning Models

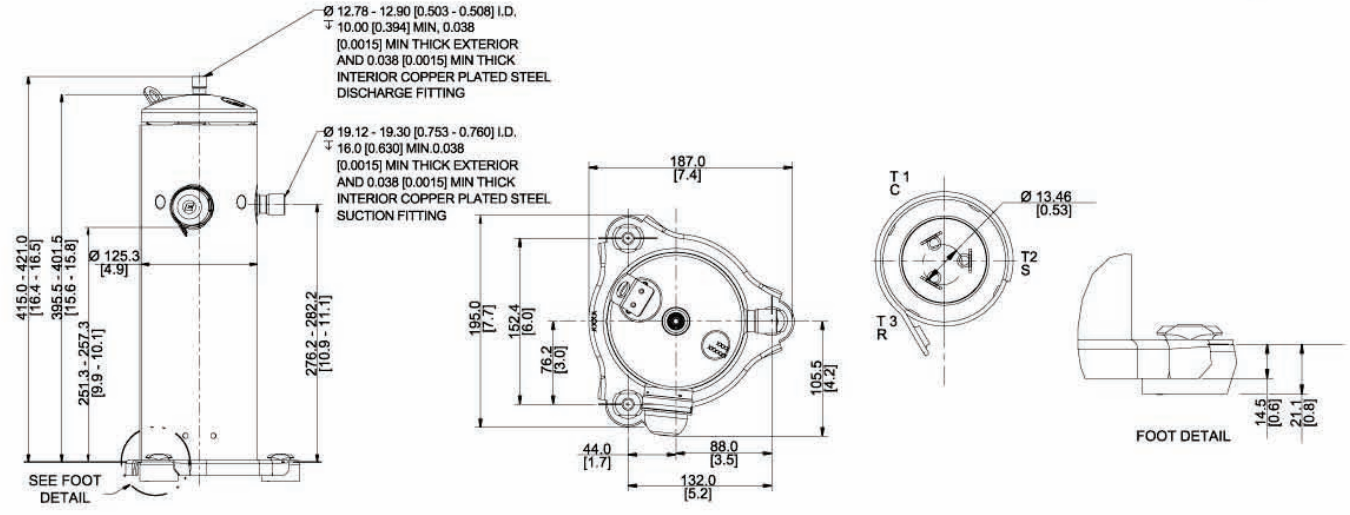

Notes:
(1) Nominal dimensions are shown. All tolerances are ± 1.50 [0.060] unless otherwise specified.
(2) Due to the accumulated assembly tolerances, the top of the compressor, terminal box, suction and discharge fitting vary from the mounting feet by ± 3.0 [0.12]
(3) Terminal box option is shown.
(4) Stub tube fittings are shown.
(5) Linear measurements in [ ] are inch conversions. Third Angle Projection

Dimensional Drawings

ZR54KE to ZR61KE
Air Conditioning Models

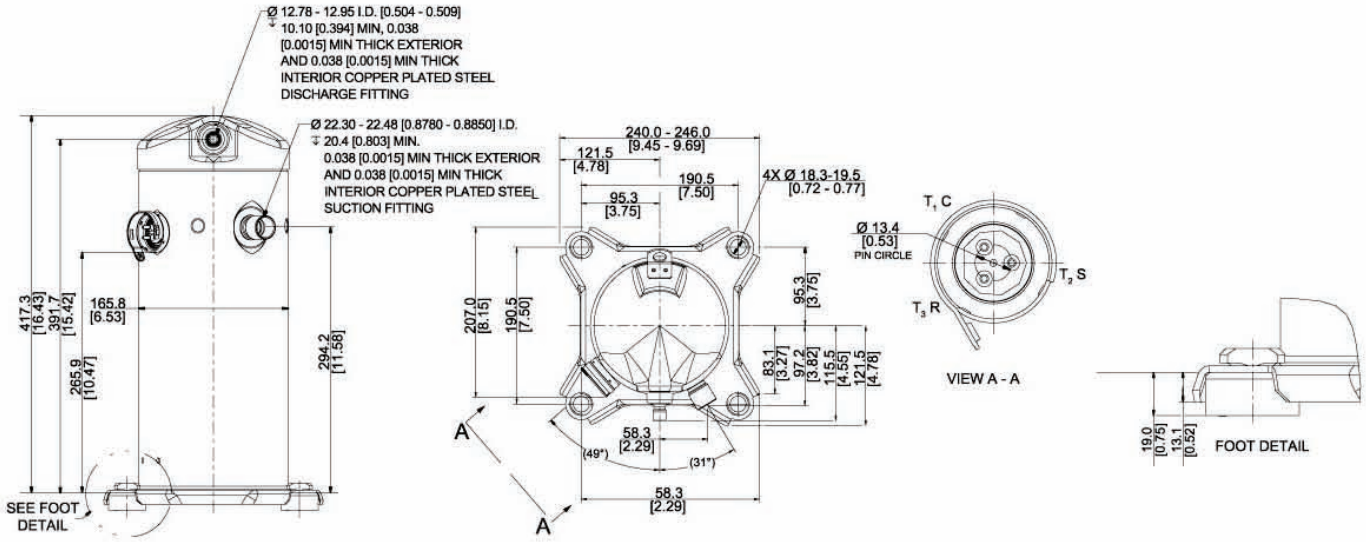

ZR68KC to ZR81KC
Air Conditioning Models

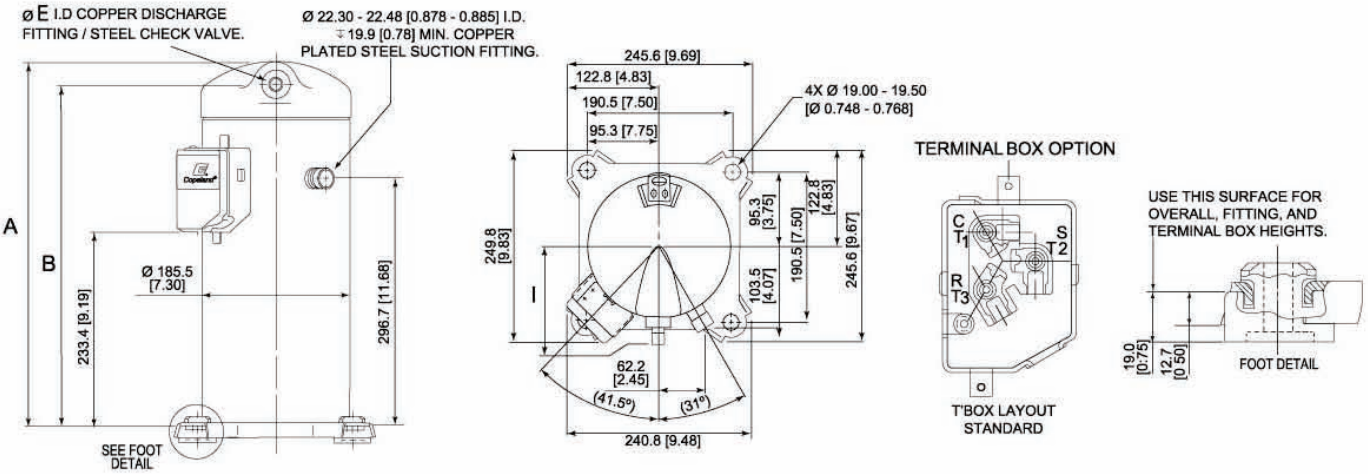

Model Number	Frame Size	A	B	ØE I.D.	I
ZR68KC	185.5 [7.30]	434.9 - 440.9 [17.13 - 17.35]	409.8 [16.13]	12.78 - 12.95 [0.504 - 0.509]	124.7 [4.91]
ZR72KC					
ZR81KC		440.4 - 446.4 [17.34 - 17.57]	413.9 [16.30]	19.10 - 19.25 [0.752 - 0.757]	128.7 [5.07]

Notes:
(1) Nominal dimensions are shown. All tolerances are ± 1.50 [0.060] unless otherwise specified.
(2) Due to the accumulated assembly tolerances, the top of the compressor, terminal box, suction and discharge fitting vary from the mounting feet by ± 3.0 [0.12]
(3) Terminal box option is shown.
(4) Stub tube fittings are shown.
(5) Linear measurements in [ ] are inch conversions. Third Angle Projection

Dimensional Drawings

ZP14K5 to ZP31K5/S
Air Conditioning Models

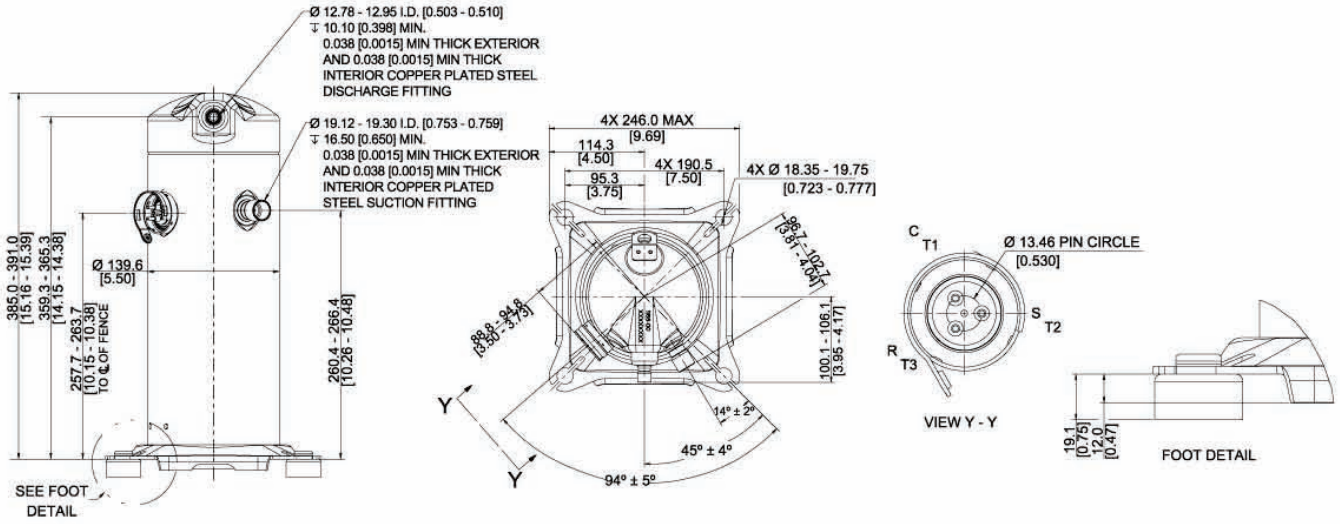

ZP20K3 to ZP44K3
Air Conditioning Models

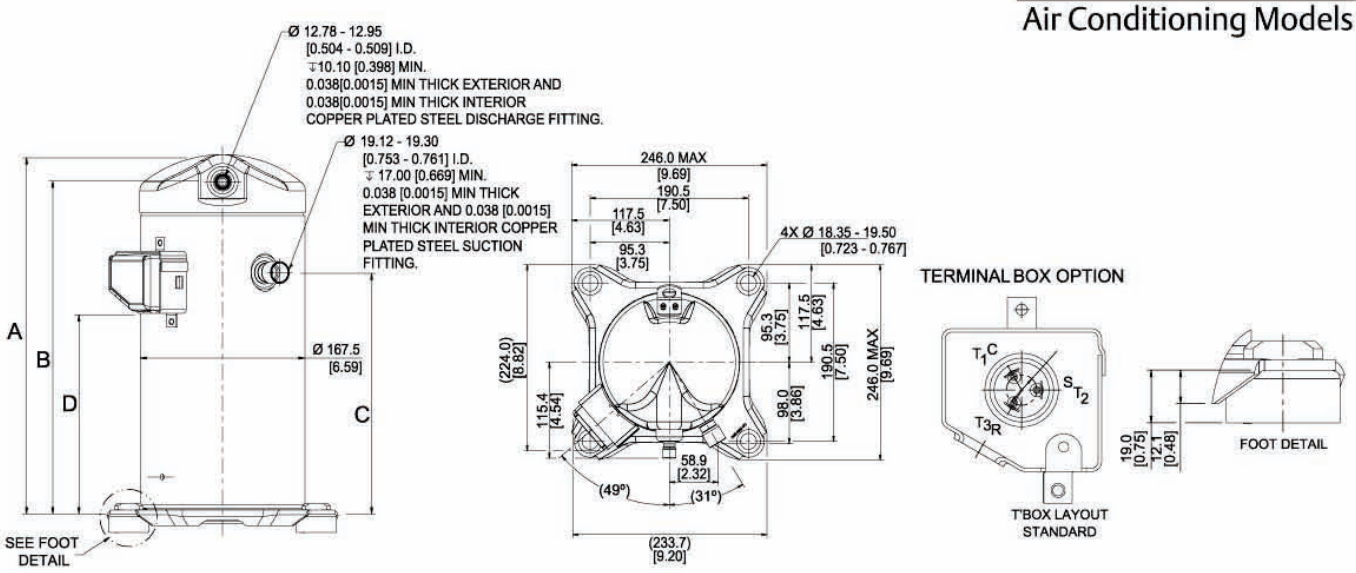

Model Number	Frame Size	A	B	C	D
ZP20K3	167.5 [6.59]	383.8 [15.11]	358.0 [14.09]	264.2 [10.40]	222.0 [8.74]
ZP26K3		362.2 [14.26]	338.4 [13.32]	244.6 [9.63]	202.4 [7.97]
ZP32K3		383.8 [15.11]	358.0 [14.09]	264.2 [10.40]	222.0 [8.74]
ZP36K3		397.5 [15.65]	371.5 [14.62]	277.9 [10.94]	236.8 [9.32]
ZP41K3					
ZP44K3					

Notes:
(1) Nominal dimensions are shown. All tolerances are ± 1.50 [0.060] unless otherwise specified.
(2) Due to the accumulated assembly tolerances, the top of the compressor, terminal box, suction and discharge fitting vary from the mounting feet by ± 3.0 [0.12]
(3) Terminal box option is shown.
(4) Stub tube fittings are shown.
(5) Linear measurements in [ ] are inch conversions. Third Angle Projection

Dimensional Drawings

ZP34K5 to ZP61K5/S
Air Conditioning Models

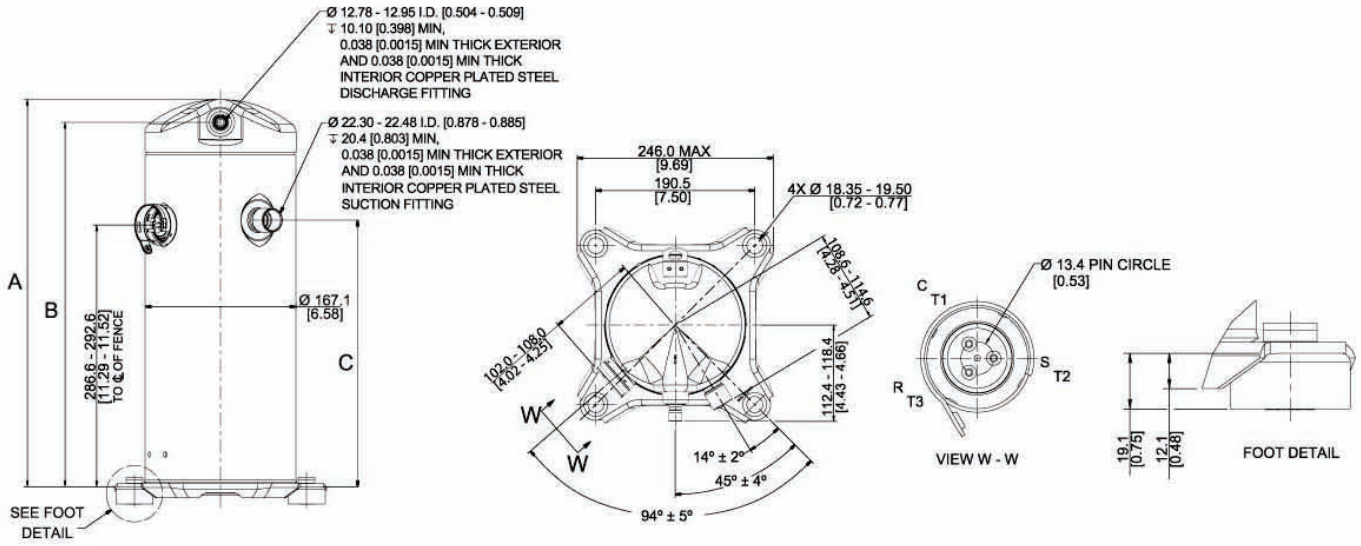

Model Number	Frame Size	A	B
ZP34K5 to ZP54K5	167.1 [6.58]	415.2 - 421.2 [16.35 -16.58]	389.6 - 395.6 [15.34 - 15.57]
ZP57K5, ZP61K5		426.5 - 432.5 [16.80 - 17.02]	400.3 - 406.3 [15.76 - 15.99]

*ZP50K3 to ZP91KC
Air Conditioning Models

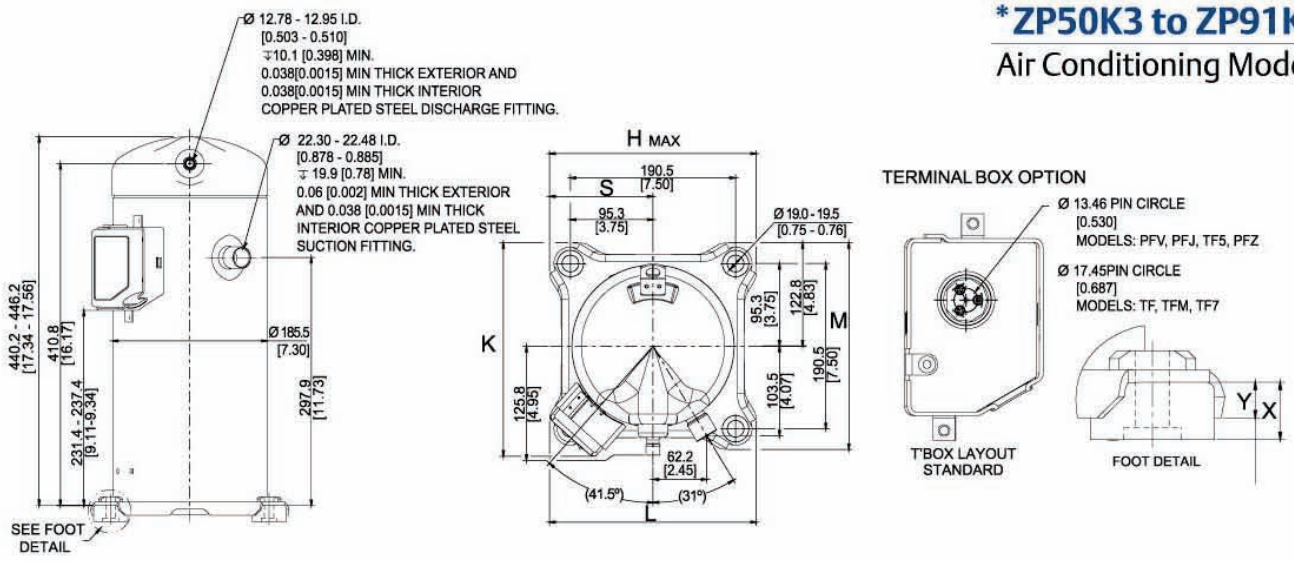

Model Number	Frame Size	H	K	L	M	S	X	Y
ZP50-83	185.5 [7.30]	245.6 [9.69]	249.8 [9.83]	240.8 [9.48]	245.6 [9.67]	122.8 [4.83]	19.0 [0.75]	12.7 [0.50]
ZP91		246.0 [9.69]	248.1 [9.77]	239.0 [9.41]	246.0 [9.69]	123.0 [4.84]	19.1 [0.75]	11.8 [0.46]

Notes:
(1) Nominal dimensions are shown. All tolerances are ± 1.50 [0.060] unless otherwise specified.
(2) Due to the accumulated assembly tolerances, the top of the compressor, terminal box, suction and discharge fitting vary from the mounting feet by ± 3.0 [0.12]
(3) Terminal box option is shown.
(4) Stub tube fittings are shown.
(5) Linear measurements in [ ] are inch conversions. Third Angle Projection
* This range does not include ZP90KC

Dimensional Drawings

ZR84 to ZR190 TF
*ZP90 to ZP182 TF
Air Conditioning Models

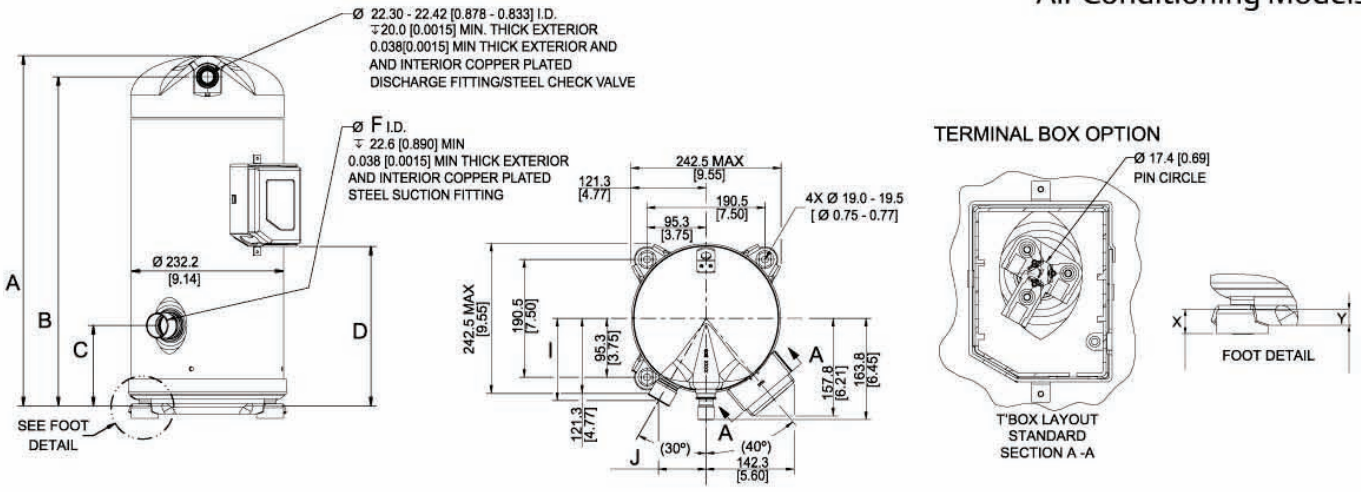

Model Number	Frame Size	A	B	C	D	ØF	I	J	Q	X	Y
ZR84 TF, ZR94 TF	232.2 [9.14]	476.4 [18.75]	444.3 [17.49]	93.6 [3.69]	201.5 [7.93]	28.49 - 28.67 [1.122 - 1.129]	132.8 [5.23]	76.6 [3.02]	164.0 [6.46]	19.1 [0.75]	12.7 [0.50]
ZR108 TF, ZR125 TF, ZR144 TF		533.2 [20.99]	501.2 [19.73]	122.1 [4.81]	242.8 [9.56]	34.84 - 35.02 [1.372 - 1.379]	133.0 [5.24]	76.8 [3.02]			
ZR160 TF, ZR190 TF		551.6 [21.72]	519.6 [20.46]	140.5 [5.53]	261.2 [10.28]				163.8 [6.45]	33.3 [1.31]	12.6 [0.50]
ZP90 TF		476.3 [18.75]	444.3 [17.49]	93.6 [3.69]	201.5 [7.93]	28.49 - 28.67 [1.122 - 1.129]	132.8 [5.23]	76.6 [3.02]	164.0 [6.46]	19.1 [0.75]	12.7 [0.50]
ZP103 TF to ZP144 TF		533.2 [20.99]	501.2 [19.73]	122.1 [4.81]	242.8 [9.56]	34.84-35.02 [1.372-1.379]	133.0 [5.24]	76.8 [3.02]			
ZP154 TF to ZP182 TF		551.6 [21.72]	519.6 [20.46]	140.5 [5.53]	261.2 [10.28]				163.8 [6.45]	33.3 [1.31]	12.6 [0.50]

ZP104, ZP122
Air Conditioning Models

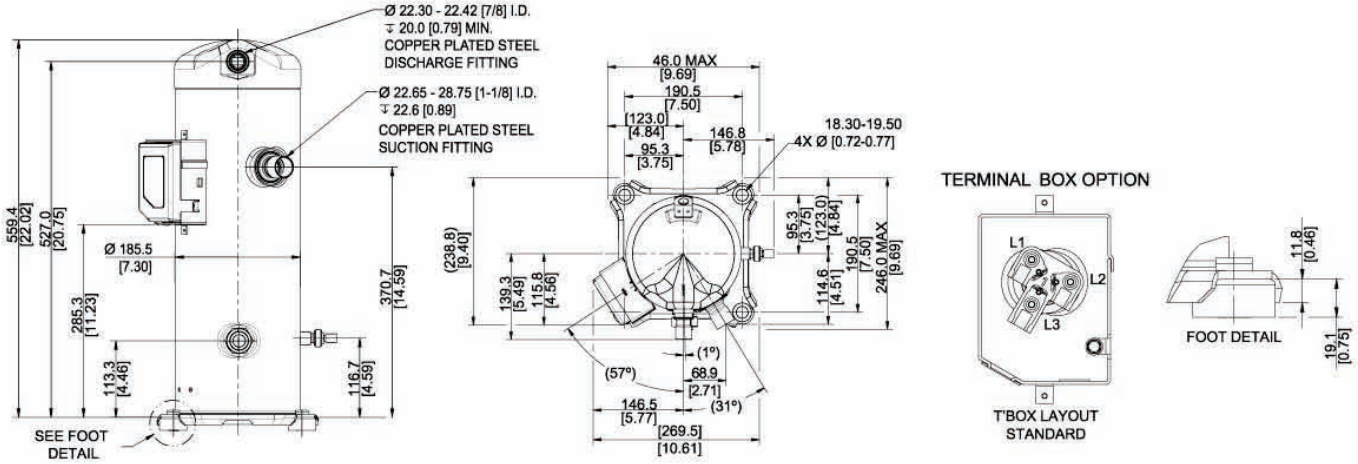

Notes:
(1) Nominal dimensions are shown. All tolerances are ± 1.50 [0.060] unless otherwise specified.
(2) Due to the accumulated assembly tolerances, the top of the compressor, terminal box, suction and discharge fitting vary from the mounting feet by ± 3.0 [0.12]
(3) Terminal box option is shown.
(4) Stub tube fittings are shown.
(5) Linear measurements in [ ] are inch conversions. Third Angle Projection
* This range does not include ZP104 and ZP122

Dimensional Drawings

ZR160 TW, ZR190 TW
ZP154 TW, ZP182 TW
Air Conditioning Models

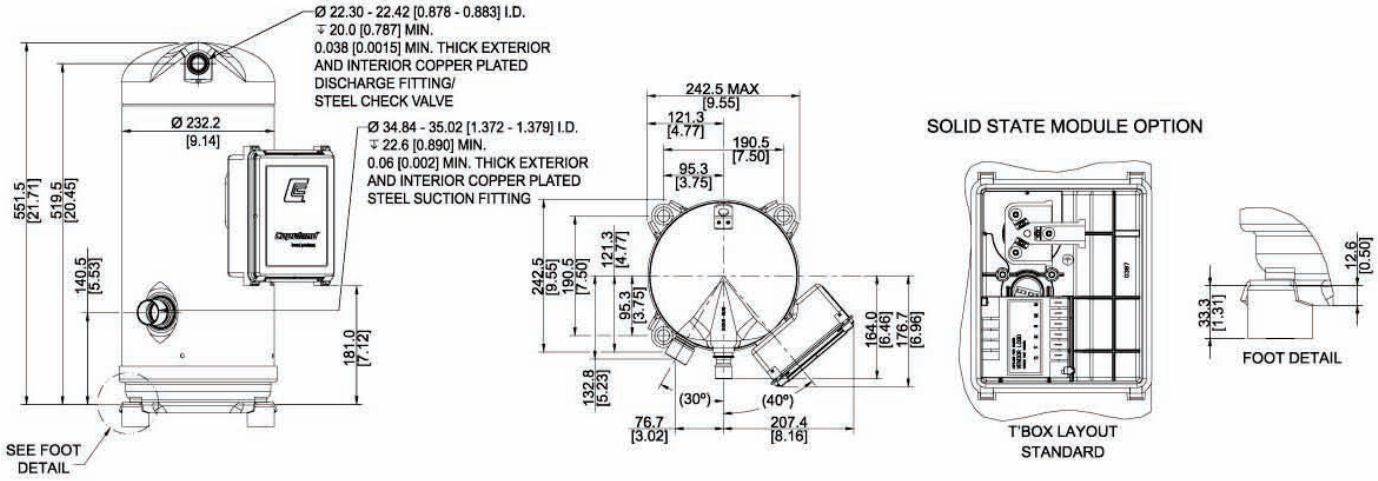

ZP235, ZR250
Air Conditioning Models

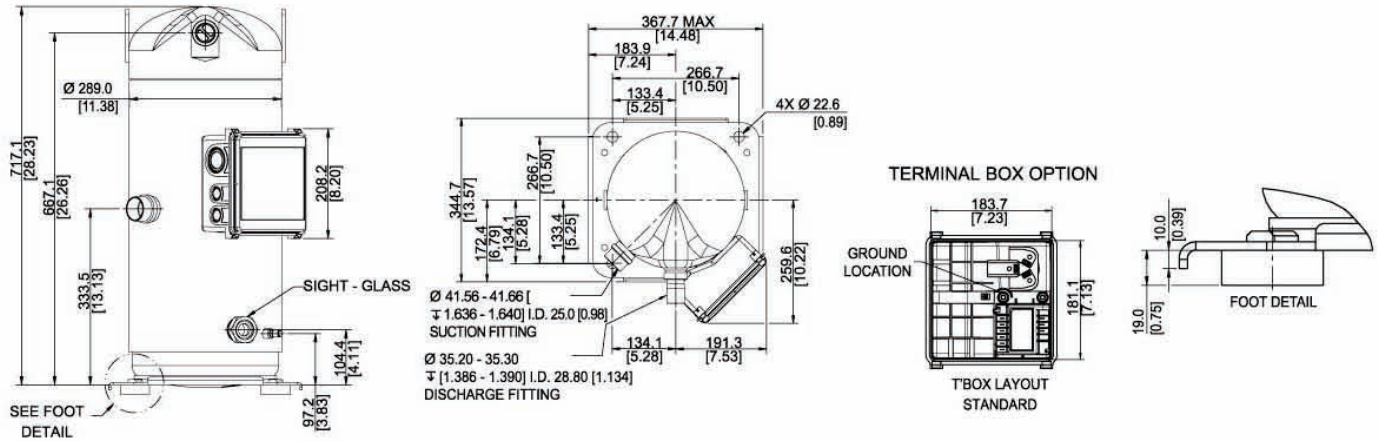

Notes:
(1) Nominal dimensions are shown. All tolerances are ± 1.50 [0.060] unless otherwise specified.
(2) Due to the accumulated assembly tolerances, the top of the compressor, terminal box, suction and discharge fitting vary from the mounting feet by ± 3.0 [0.12]
(3) Terminal box option is shown.
(4) Stub tube fittings are shown.
(5) Linear measurements in [ ] are inch conversions. Third Angle Projection

Dimensional Drawings

ZR310 to ZR380
ZP295 to ZP485
Air Conditioning Models

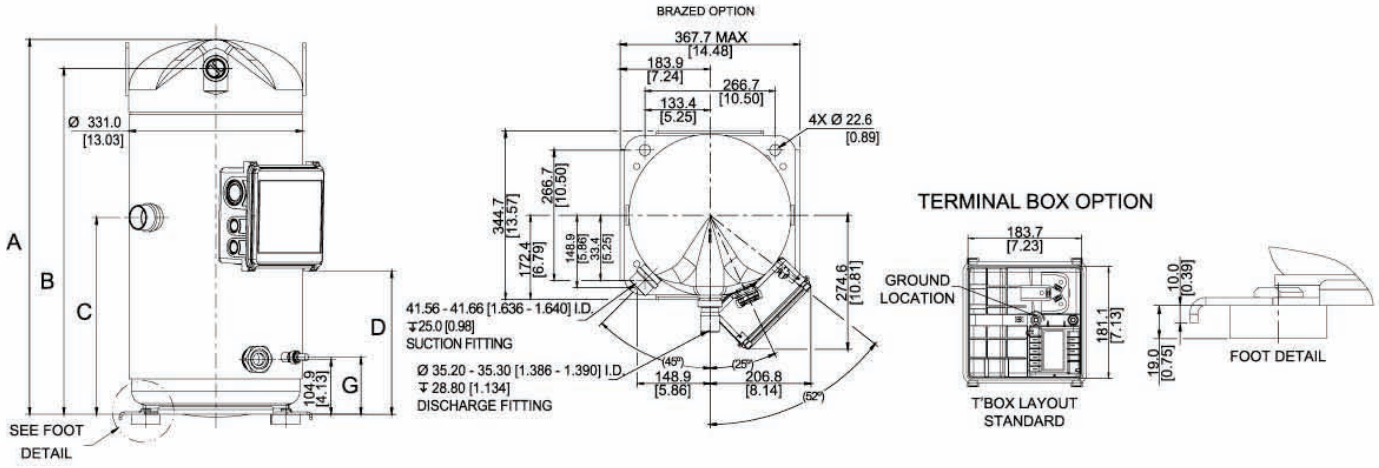

Model Number	Frame Size	A	B	C	D	G
ZR310, ZR380	331.00 [13.03]	715.1 [28.15]	659.7 [25.97]	375.3 [14.77]	273.3 [10.76]	108.8 [4.28]
ZP295, ZP385						
ZP485		746.1 [29.37]	690.7 [27.19]	406.3 [16.00]	304.3 [11.98]	97.7 [3.85]

ZPD34 to ZPD54
Air Conditioning Models

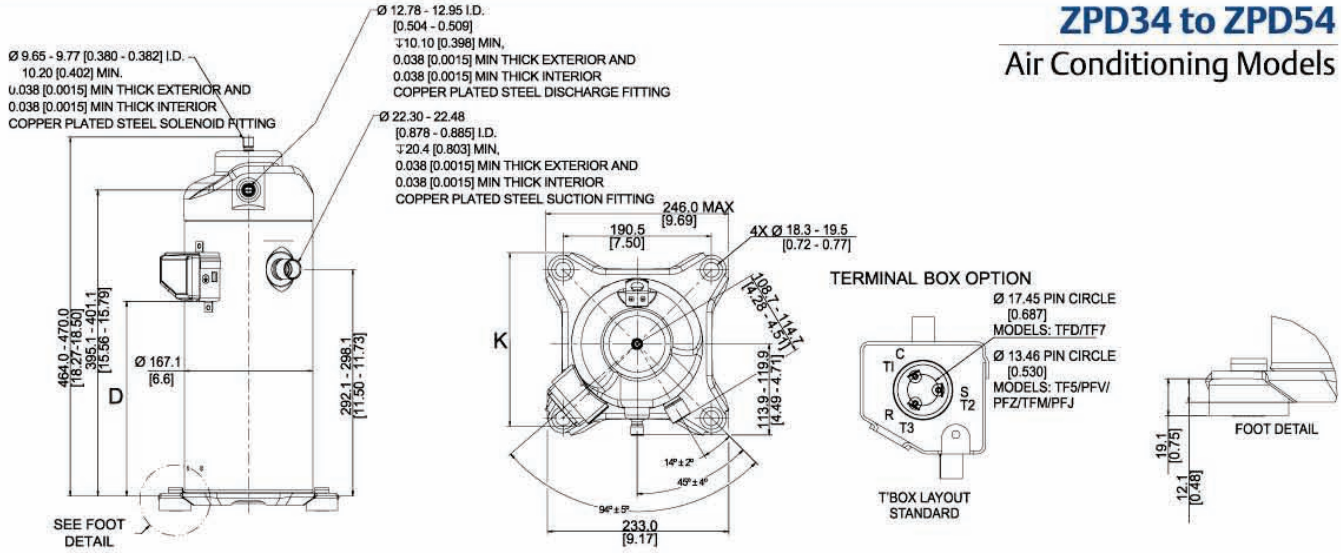

Model Number	Frame Size	D	K	L
ZPD34	167.1 [6.6]	250.5 - 256.5 [9.87-10.09]	223.5 [8.80]	233.0 [9.17]
ZPD42				
ZPD51		221.4 - 227.4 [8.72 - 8.95]	231.8 [9.12]	236.2 [9.3]
ZPD54				

Notes:
(1) Nominal dimensions are shown. All tolerances are ± 1.50 [0.060] unless otherwise specified.
(2) Due to the accumulated assembly tolerances, the top of the compressor, terminal box, suction and discharge fitting vary from the mounting feet by ± 3.0 [0.12]
(3) Terminal box option is shown.
(4) Stub tube fittings are shown.
(5) Linear measurements in [ ] are inch conversions. Third Angle Projection

Dimensional Drawings

ZRD36 to ZRD48
Air Conditioning Models

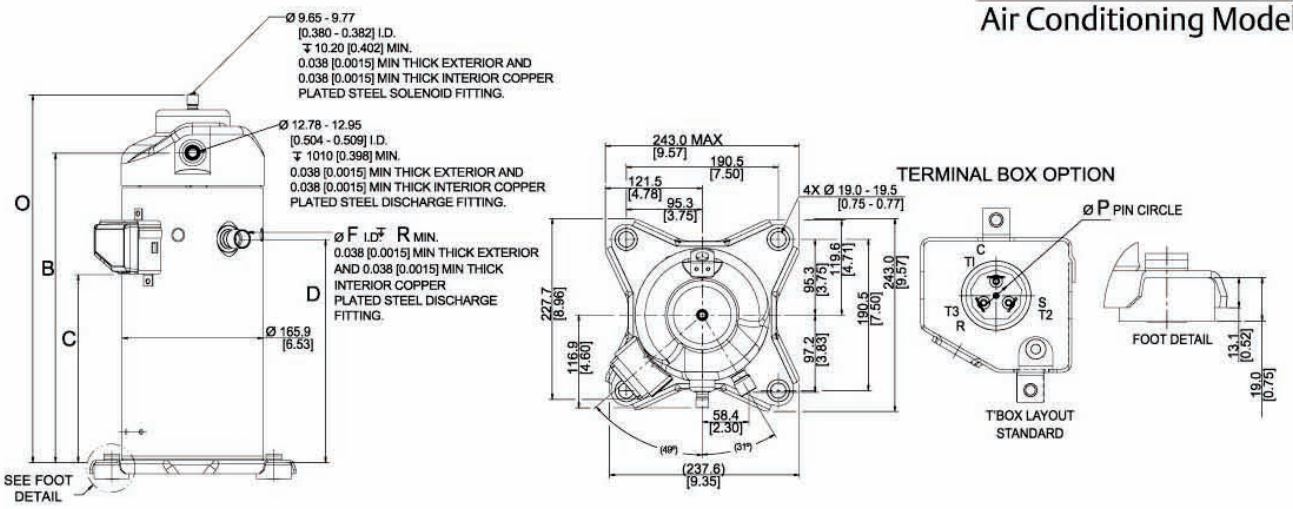

Model Number	Frame Size	O	B	C	D	ØF	ØP	R
ZRD36	165.9 [6.53]	434.6 [17.11]	365.7 [14.40]	263.7 [10.38]	222.1 [8.74]	19.12 - 19.30 [0.753 - 0.761]	13.46 - 17.45 [0.530 - 0.687]	17.00 [0.669]
ZRD42		449.0 [17.68]	380.1 [14.96]	277.1 [10.91]	235.1 [9.25]			
ZRD48		465.4 [18.32]	396.5 [15.61]	293.5 [11.56]	252.0 [9.92]	22.30 - 22.48 [0.878 - 0.885]		20.40 [0.803]

ZRD49 to ZRD81
ZPD61 to ZPD91
Air Conditioning Models

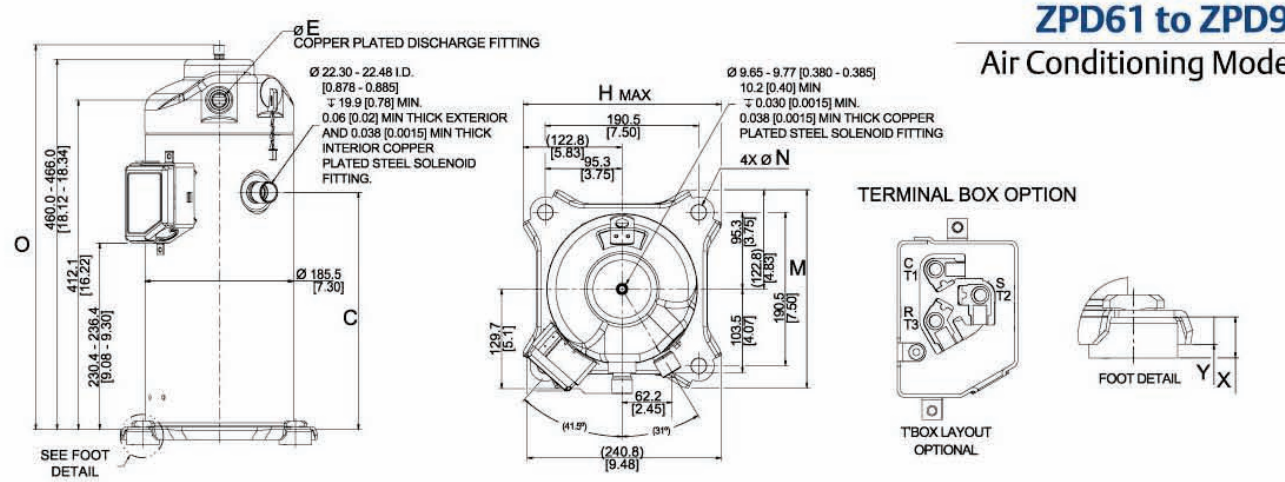

Model Number	Frame Size	C	ØE I.D.	H	I	M	ØN	O	X	Y
ZRD49	185.5 [7.30]	296.7 [11.86]	12.78-12.95 [0.50-0.51]	246.0 [9.69]	125.6 [4.94]	249.8 [9.83]	18.3 - 19.5 [0.72 - 0.77]	481.1 [18.94]	19.1 [0.75]	12.7 [0.50]
ZRD61										
ZRD68										
ZRD72										
ZRD81			19.10 - 19.25 [0.75 - 0.76]		129.7 [5.1]		18.0 - 19.2 [0.71-0.75]		19.0 [0.75]	
ZPD61		296.9 [11.96]	12.78-12.90 [0.503 - 0.508]		125.45 [4.94]	252.5 [9.94]	18.3 - 19.5 [0.73 - 0.76]	478.1-484.1 [18.83-19.05]	19.05 [0.75]	11.8 [0.46]
ZPD67										
ZPD72										
ZPD83										
ZPD91			19.10 - 19.25 [0.75 - 0.76]	245.6 [9.67]	129.7 [5.1]		19.0 - 19.5 [0.75 - 0.76]		19.1 [0.75]	

Notes:
(1) Nominal dimensions are shown. All tolerances are ± 1.50 [0.060] unless otherwise specified.
(2) Due to the accumulated assembly tolerances, the top of the compressor, terminal box, suction and discharge fitting vary from the mounting feet by ± 3.0 [0.12]
(3) Terminal box option is shown.
(4) Stub tube fittings are shown.
(5) Linear measurements in [ ] are inch conversions. Third Angle Projection

Dimensional Drawings

ZW21 to ZW34

Heat Pump Water Heating Models

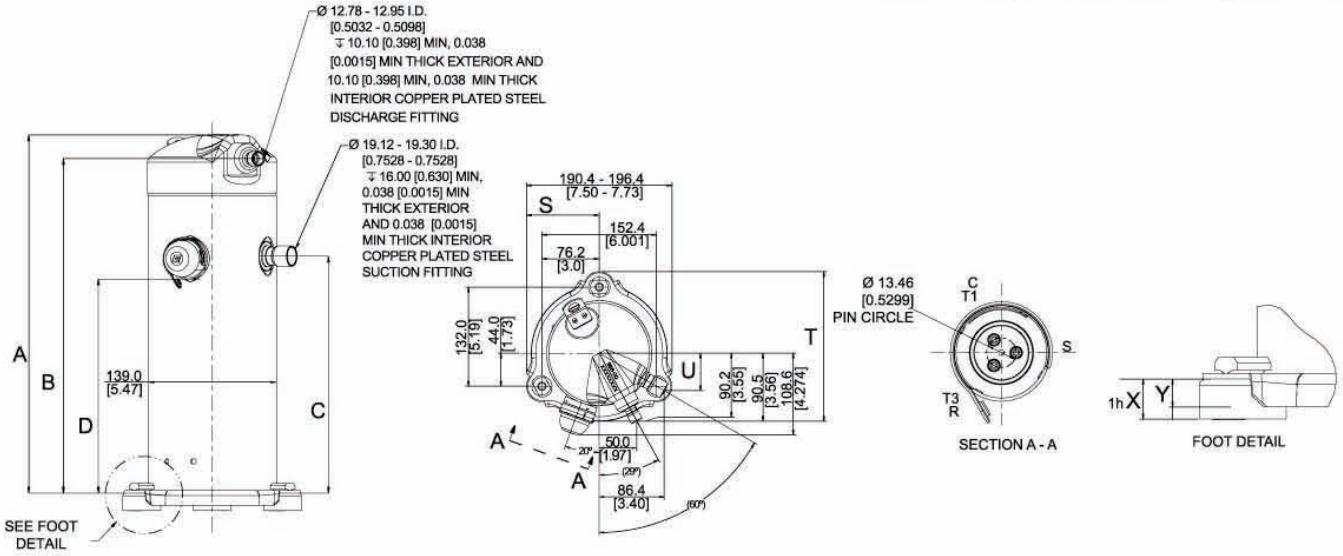

Model Number	Frame Size	A	B	C	D	S	T	U	X	Y
ZW21	139.0 [5.473]	384.7-390.7 [15.15-15.38]	362.0 [14.25]	253.4-259.4 [9.97-10.21]	228.5-234.5 [8.996-9.232]	96.7 [3.81]	199.1 [7.84]	49.9 [1.96]	19.1 [0.75]	13.3 [0.52]
ZW30		386.5-392.5 [15.22-15.45]	364.4 [14.34]	255.7-261.7 [10.07-10.30]	230.9-236.9 [9.09-9.33]	96.9 [3.82]	197.5 [7.78]	49.9 [1.96]	19.0 [0.75]	13.5 [0.53]
ZW34		386.5-392.5 [15.22-15.45]	364.4 [14.34]	255.7-261.7 [10.07-10.30]	230.9-236.9 [9.09-9.33]	96.9 [3.82]	197.5 [7.78]	49.9 [1.96]	19.0 [0.75]	13.5 [0.53]

ZW61

Heat Pump Water Heating Models

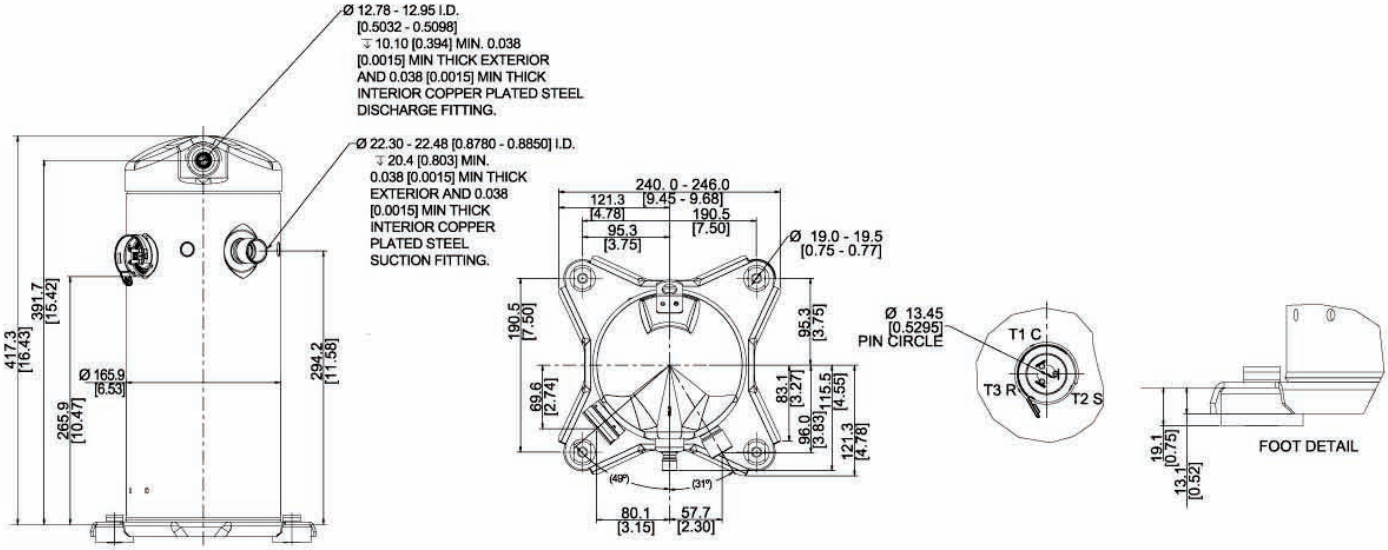

Notes:

(1) Nominal dimensions are shown. All tolerances are ± 1.50 [0.060] unless otherwise specified.
(2) Due to the accumulated assembly tolerances, the top of the compressor, terminal box, suction and discharge fitting vary from the mounting feet by ± 3.0 [0.12]
(3) Terminal box option is shown.
(4) Stub tube fittings are shown.
(5) Linear measurements in [ ] are inch conversions. Third Angle Projection

Dimensional Drawings

ZW108

Heat Pump Water Heating Models

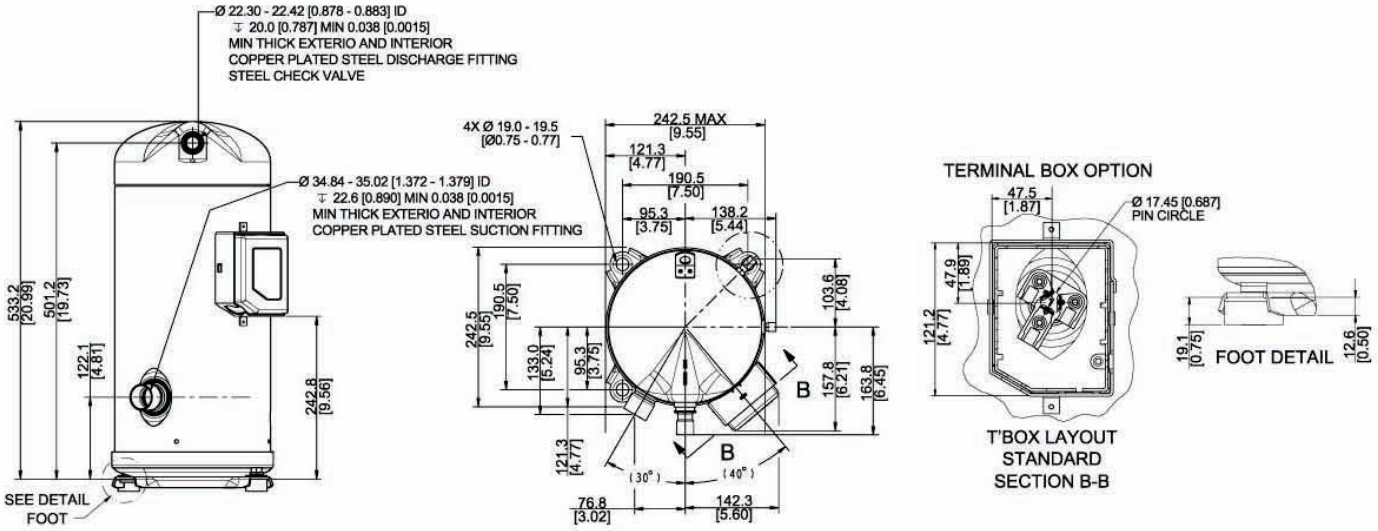

Notes:

(1) Nominal dimensions are shown. All tolerances are ± 1.50 [0.060] unless otherwise specified.
(2) Due to the accumulated assembly tolerances, the top of the compressor, terminal box, suction and discharge fitting vary from the mounting feet by ± 3.0 [0.12]
(3) Terminal box option is shown.
(4) Stub tube fittings are shown.
(5) Linear measurements in [ ] are inch conversions. Third Angle Projection

Bill of Material

Model	BOM #	Stub	Rotalock	Sight Glass	Oil Equalization	Schrader Valve	MTG Parts[1]	Grounding	Internal Protector	24V Module	120/240V module	Tandem-Ready
ZR16 - ZR18	600	x					x	x	x			
	622	x					x	x	x			
ZR28 - ZR30 KM	582	x					x	x	x			
	583	x					x	x	x			
ZR22 - ZR47	230	x					x		x			
	511	x					x		x			
	512	x					x		x			
	522	x					x	x	x			
	590	x					x		x			
	600	x					x	x	x			
	622	x					x	x	x			
ZR48 - ZR81	230	x					x		x			
	250	x					x		x			
	422	x			x		x	x	x			x
	511	x					x		x			
	522/52E	x					x	x	x			
	592	x					x	x	x			
	593	x					x	x	x			
	599	x					x		x			
ZP14 - ZP61 KSE/K5E	496	x			x		x	x	x			x
	499	x			x		x		x			x
	522	x					x	x	x			
	593	x					x	x	x			
	622	x					x	x	x			
	422/42E	x			x		x	x	x			x
ZP23, ZP76 ZP83, ZP91	522/52E	x					x	x	x			
	593	x					x	x	x			
	594	x					x		x			
ZR84 - ZR144 ZP90 - ZP137[2]	422/42E	x			x		x	x	x			x
	425/42H	x		x	x	x	x	x	x			x
	522/52E	x					x	x	x			
	523/52F		x				x	x	x			
	550/55A	x		x		x	x	x	x			
	551		x	x		x	x	x	x			
ZP104, ZP122	423	x			x		x	x	x			x
	522	x					x	x	x			
ZR160 - ZR190 TF ZP154 - ZP182 TF	422	x			x		x	x	x			x
	425	x		x	x	x	x	x	x			x
	522	x					x	x	x			
	523		x				x	x	x			
	550	x		x		x	x	x	x			
	551		x	x		x	x	x	x			
ZR160 - ZR190 TW ZP154 - ZP182 TW	425	x		x	x	x	x	x		x		x
	522	x					x	x			x	
	523		x				x	x			x	
	550	x		x		x	x	x			x	
	551		x	x		x	x	x			x	
ZR250 - ZR380 ZP235 - ZP485	522	x					x	x			x	
	523		x				x	x			x	

Notes:

1. BOM 4XX has hard mounting parts and BOM 5XX has soft mounting parts
2. This range does not include ZP91, ZP104 and ZP122

General Information

Technical data are correct at the time of printing. Updates may occur, and should you need confirmation of a specific value, please contact Emerson Climate Technologies stating clearly the information required.

Emerson Climate Technologies cannot be held responsible for errors in capacities, dimensions, etc., stated herein. Products, specifications and data in this literature are subject to change without notice.

The information given herein is based on data and tests which Emerson Climate Technologies believes to be reliable and which are in accordance with today's technical knowledge. It is intended for use by persons having the appropriate technical knowledge and skill, at their own discretion and risk. Our products are designed and adapted for fixed locations. For mobile applications, failures may occur.

The suitability for this has to be assured from the plant manufacturer, which may include making appropriate tests.

Note:

The components listed in this catalogue are not released for use with caustic, poisonous or flammable substances. Emerson Climate Technologies cannot be held responsible for any damage caused by using these substances.





Notes







EMERSON™
Climate Technologies



Contact List

Emerson Climate Technologies
Asia Pacific Headquarters
Suite No. 2503-8, 25/F,
Exchange Tower, 33 Wang Chiu Road,
Kowloon Bay, Kowloon, Hong Kong
Tel: (852) 2866 3108
Fax: (852) 2520 6227

Australia
Emerson Climate Technologies Australia Pty Ltd
356 Chisholm Road
Auburn NSW 2143, Australia
Tel: (612) 9795 2800
Fax: (612) 9738 1699

China - Beijing
Emerson Climate Technologies (Suzhou) Co. Ltd
Beijing Sales Office
Room 1017 JianWei Building,
66 Nan Lishi Road, XiCheng District,
Beijing, PRC
Tel: (8610) 5763 0488
Fax: (8610) 5763 0499

China - Guangzhou
Emerson Climate Technologies (Suzhou) Co. Ltd
Guangzhou Sales Office
508-509 R&F Yinglong Plaza,
No. 76 Huangpu Road West,
Guangzhou, PRC
Tel: (8620) 2886 7668
Fax: (8620) 2886 7622

China - Shanghai
Emerson Climate Technologies (Suzhou) Co. Ltd
Shanghai Sales Office
1801 Building B, New CaoHeJing
International Business Center,
391Guiping Rd, Shanghai, PRC
Tel: (8621) 3418 3968

India - Mumbai
Emerson Climate Technologies (India) Pvt. Limited
Unit No. 4,5,6 & 7, Bhaveshwar Arcade
LBS Marg, Opp. Shreyas Cinema
Ghatkopar (West)
Mumbai 400 086, Maharashtra, India
Tel: (9122) 2500 6630 / 2500 6632
Fax: (9122) 2500 6570

India - PUNE
Emerson Climate Technologies (India) Pvt. Limited
Plot No. 23, Rajiv Gandhi Infotech Park,
Phase - II, Hinjewadi,
Pune 411 057, Maharashtra, India
Tel: (9120) 2553 4988
Fax: (9120) 2553 6350

Indonesia
PT Emerson Indonesia
Wisma 46 - Kota BNI, 16th Floor, Suite 16.01,
Jl. Jend.Sudirman Kav.1.
Jakarta 10220, Indonesia
Tel: (6221) 2513003
Fax: (6221) 2510622

Japan
Emerson Japan Ltd
Shin-yokohama Tosho Building
No. 33-9-5 Shin-Yokohama, Kohoku-ku
Yokohama 222-0033 Japan
Tel: (8145) 475 6371
Fax: (8145) 475 3565

South Korea
Emerson Electric Korea Ltd.
3F POBA Gangnam Tower, 119 Nonhyun-Dong, Gangnam-Gu, Seoul 135-010 Korea
Tel: (822) 3483 1500
Fax: (822) 592 7883

Malaysia
Emerson Electric (Malaysia) Sdn. Bhd.
Level M2, Blk A, Menara PKNS-PJ
Jalan Yong Shook Lin
46050 Petaling Jaya, Selangor, Malaysia
Tel: (603) 7949 9222
Fax: (603) 7949 9333

Middle East & Africa
Emerson Climate Technologies
PO Box 26382
Jebel Ali Free Zone – South
Dubai, UAE
Tel: (9714) 811 8100
Fax: (9714) 886 5465

Philippines
Emerson Climate Technologies
23rd Floor San Miguel Properties Centre
#7 St. Francis Street, Ortigas Center,
Mandaluyong City, Philippines
Tel: (632) 689 7200

Taiwan
Emerson Electric (Taiwan) Co. Ltd
3F No. 2 DunHua South Road Sec.1,
Taipei (105), Taiwan
Tel: (8862) 8161 7688
Fax: (8862) 81617614

Thailand - Bangkok
Emerson Electric (Thailand) Ltd
34th Floor TCIF Tower
1858/133 Bangna Trad
Bangkok 10260 , Thailand
Tel: (662) 716 4700
Fax: (662) 751 4240

Vietnam
Emerson Climate Technologies - Vietnam
Suite 307-308,
123 Truong Dinh St., Dist.3
Ho Chi Minh, Vietnam
Tel: (84) 908 009 189

EmersonClimateAsia.com

Asia 02 B01 03 – R00 Issued 2/2013

Emerson, Copeland PerformanceAlert and Copeland Scroll are trademarks of Emerson Electric Co. or one of its affiliated companies. ©2013 Emerson Climate Technologies, Inc. All rights reserved.

EMERSON. CONSIDER IT SOLVED.™